Shabal

E. Bresson
A. Canteaut
B. Chevallier-Mames
C. Clavier
T. Fuhr
A. Gouget
T. Icart
J.-F. Misarsky
M. Naya-Plasencia
P. Paillier
T. Pornin
J.-R. Reinhard
C. Thuillet
M. Videau

Cryptolog, DCSSI, EADS, France Télécom, Gemalto, INRIA, Sagem Sécurité
initiated by the Saphir project

The first SHA-3 NIST Conference, February 27, 2009

Main characteristics of Shabal

Parameters.

- Internal state: 44 words (1408 bits).
- Message blocks: 16 words (512 bits).

Generic construction.

- Message rounds: iterate a keyed permutation with respect to a provably secure mode of operation;
- Final rounds: 3 slightly different additional rounds;
- Output: ℓ_h bits from the internal state;
- Keyed permutation: operates on a 28-word input, parameterized by two 16-word values.

Message rounds

$|\boldsymbol{A}| = \mathbf{12}$ words and $|\boldsymbol{B}| = |\boldsymbol{C}| = \mathbf{16}$ words.

$\boldsymbol{W}$: $\mathbf{2}$-word counter.

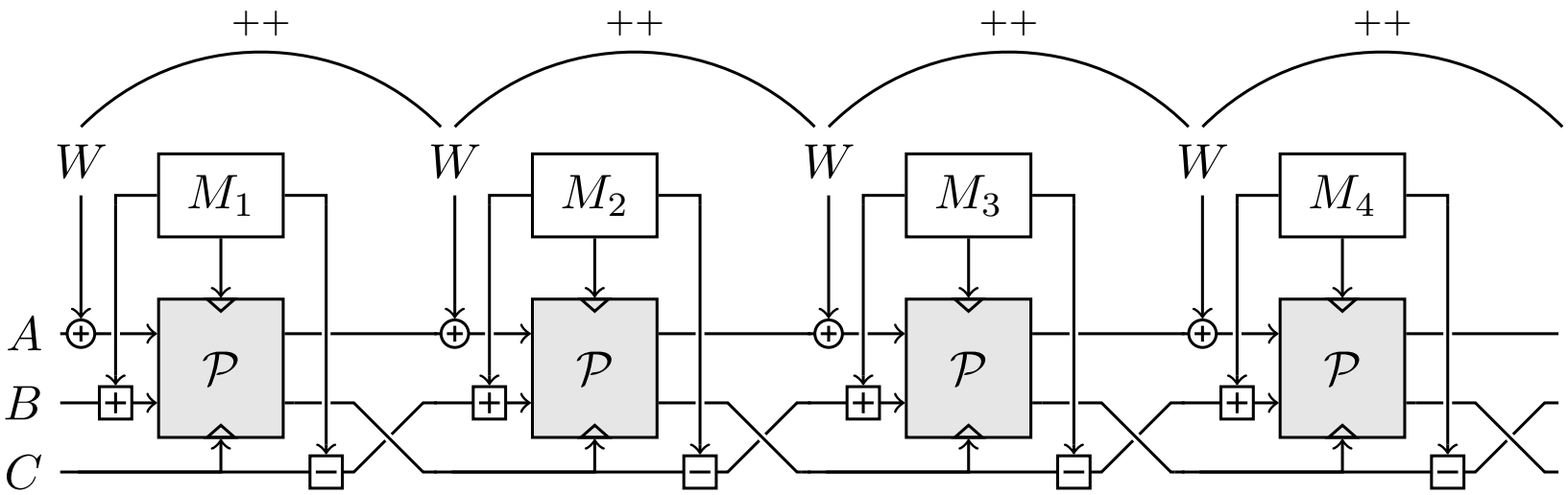

Final rounds

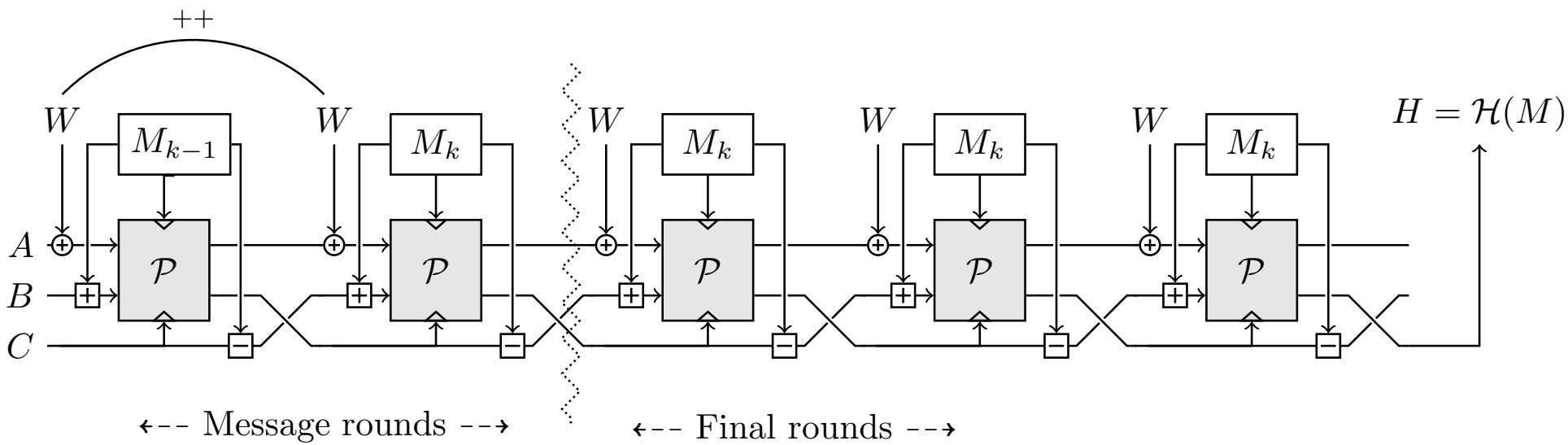

Final rounds: equivalent view

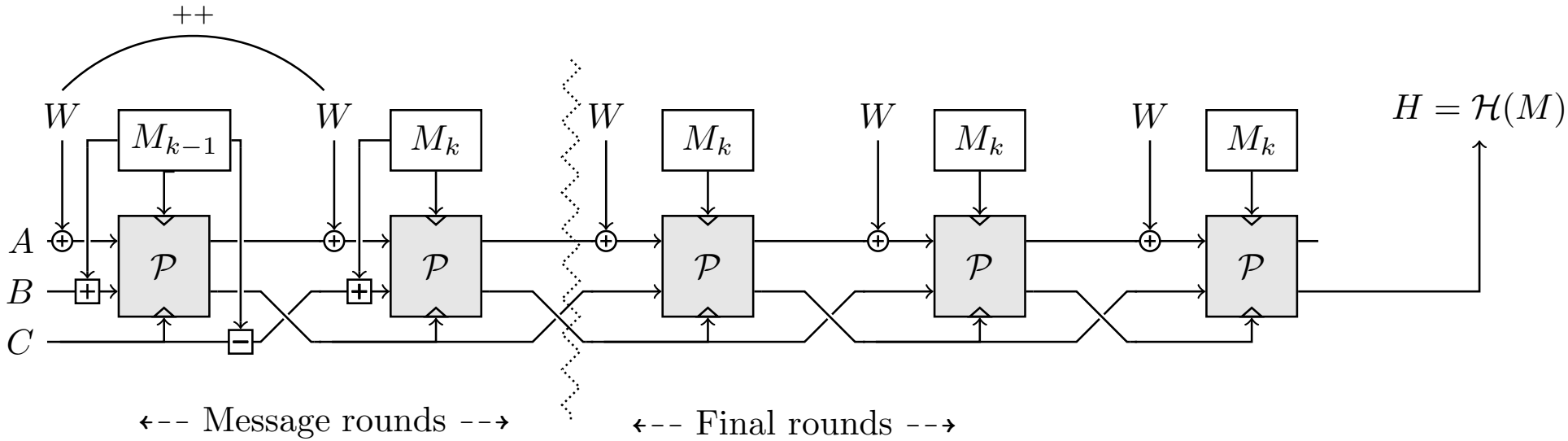

Padding and initialization

Padding.

The message is post-padded with a 1 followed by as many 0 as required so that the length is a multiple of 512 bits.

Initialization.

- Prefix approach: the message is prefixed with two 512-bit blocks

$$(\ell_h, \ldots, \ell_h + 15), (\ell_h + 16, \ldots, \ell_h + 31)$$

where ℓ_h is the output length.

$$\text{internal state} \leftarrow 0, \ \text{counter} \leftarrow -1.$$

- IV approach:

$$\text{internal state} \leftarrow IV_{\ell_h}, \ \text{counter} \leftarrow 1.$$

Shabal generic operating mode

$|\boldsymbol{A}| = \boldsymbol{\ell_a}$ bits and $|\boldsymbol{B}| = |\boldsymbol{C}| = |\boldsymbol{M_i}| = \boldsymbol{\ell_m}$ bits.

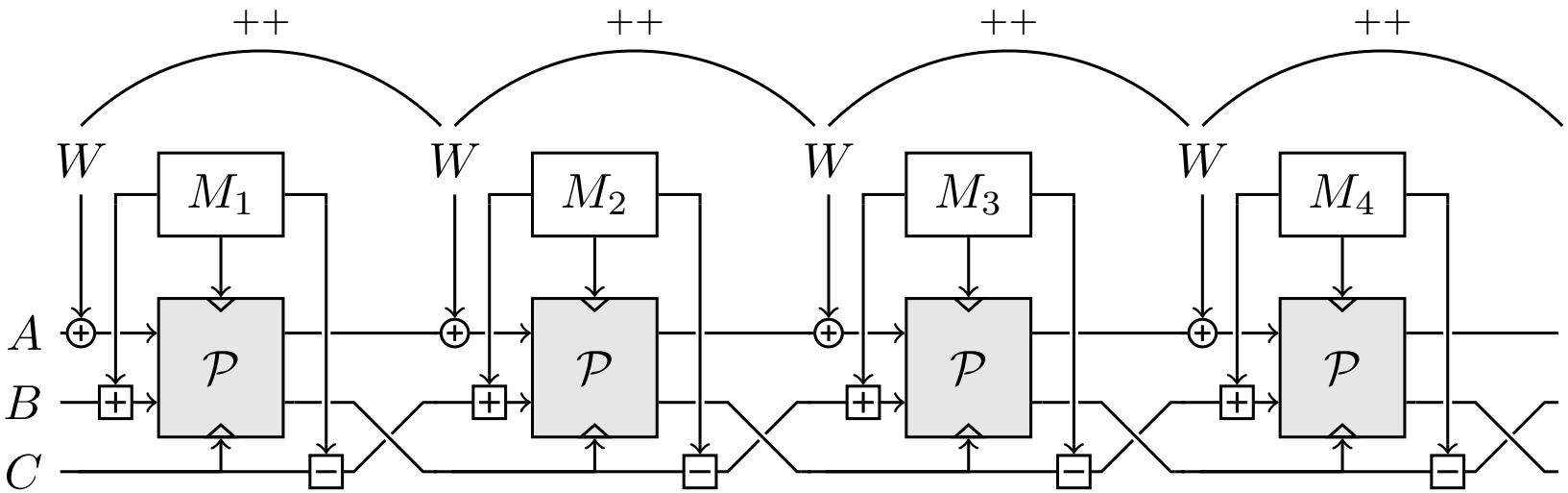

A provably secure operating mode

If the keyed permutation $\mathcal{P}$ is viewed as a random keyed permutation, we can prove:

Indifferentiability from a random oracle.

- Shabal behaves like a random oracle up to

$$2^{\frac{\ell a+\ell m}{2}} = 2^{448}$$

  evaluations of $\mathcal{P}$ or $\mathcal{P}^{-1}$.

- Internal collisions require no less than 2^{448} evaluations of $(\mathcal{P}, \mathcal{P}^{-1})$;

- Shabal is collision resistant when the collision finder is bounded to $2^{\ell h/2}$ evaluations of $(\mathcal{P}, \mathcal{P}^{-1})$.

A provably secure operating mode (2)

(Second)-preimage resistance.

- Shabal is preimage resistant when the preimage finder is limited to

$$\min\left(2^{\ell_h}, 2^{\ell_a+\ell_m-\log(\ell_m+1)-2}\right) = \min\left(2^{\ell_h}, 2^{885}\right) = 2^{\ell_h}$$

  evaluations of $(\mathcal{P}, \mathcal{P}^{-1})$.

- Shabal is second preimage-resistant for κ-bit messages up to

$$\min\left(2^{\ell_h}, 2^{\ell_a+\ell_m-\log k^*}\right) = \min\left(2^{\ell_h}, 2^{903-\log\kappa}\right)$$

  evaluations of $(\mathcal{P}, \mathcal{P}^{-1})$ where $k^* = \lceil(\kappa+1)/\ell_m\rceil$.

Sébastien Chabal

http://commons.wikimedia.org/wiki/File:Sebastien-Chabal_large.jpg

http://www.thesun.co.uk/sol/homepage/sport/rugby_union/article326083.ece

Chabal eats Gröstl for breakfast

The keyed permutation

Input: M, A, B, C **Output:** A, B

for i from 0 to 15 **do**

$B[i] \leftarrow B[i] \lll 17$

end for

for j from 0 to 2 **do**

for i from 0 to 15 **do**

$$A[i + 16j \bmod 12] \leftarrow \mathcal{U}\big(A[i + 16j \bmod 12] \oplus C[8 - i \bmod 16] \oplus \mathcal{V}(A[i - 1 + 16j \bmod 12] \lll 15)\big) \oplus M[i] \oplus B[i + 13 \bmod 16] \oplus (B[i + 9 \bmod 16] \wedge \overline{B[i + 6 \bmod 16]})$$

$$B[i] \leftarrow (B[i] \lll 1) \oplus \overline{A[i + 16j \bmod 12]}$$

end for

end for

for j from 0 to 35 **do**

$A[j \bmod 12] \leftarrow A[j \bmod 12] + C[j + 3 \bmod 16]$

end for

The keyed permutation (without the final update of A)

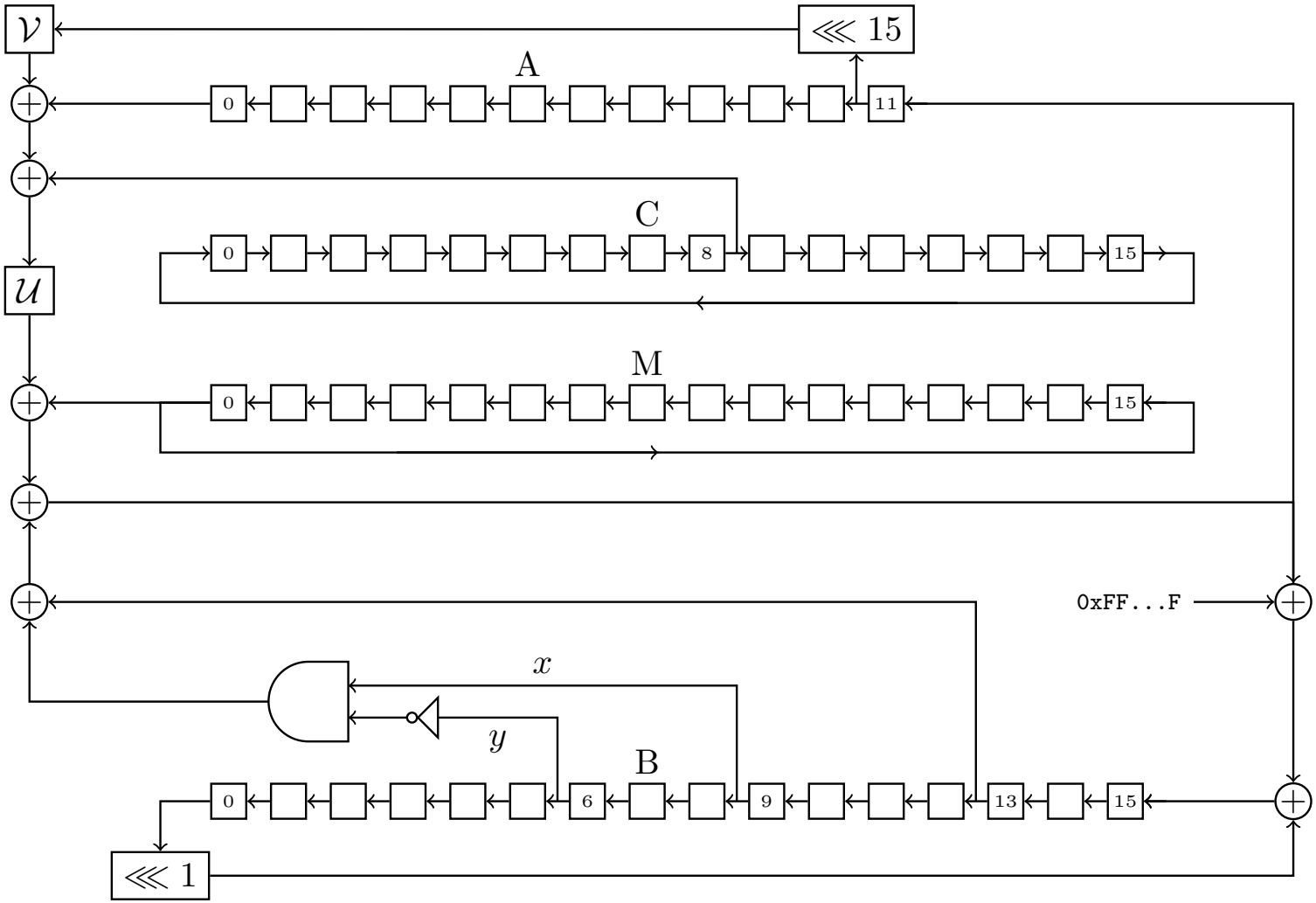

Choice of the nonlinear permutations

$$\mathcal{U} : x \mapsto \ 3 \times x \bmod 2^{32}$$
$$\mathcal{V} : x \mapsto \ 5 \times x \bmod 2^{32}$$

- they avoid the use of look-up tables;
- they can be easily hard-coded (one bit shift and one addition);
- they cannot transform a symmetric difference (the all-one word) into a symmetric difference;
- one difference in the message block causes at least one difference between the inputs of $\mathcal{U}$ or of $\mathcal{V}$ after two rounds.

Weakened versions of Shabal: Weakinson-xxx

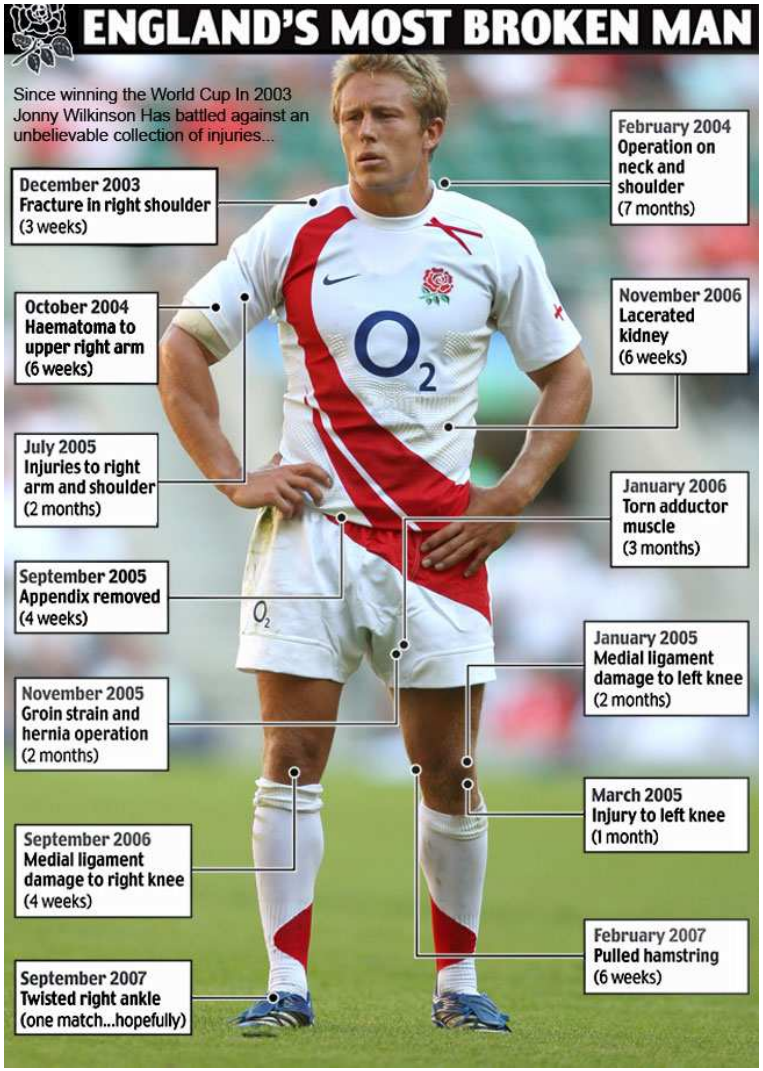

http://www.dailymail.co.uk/sport/rugbyunion/article-480057/

Fast, efficient, with good statistics, but often broken.

Security analysis of Weakinson

Distinguishers for the keyed permutation? [Aumasson09].

Distinguish $\mathcal{P}$ from some queries $\mathcal{P}_{M,C}(A, B)$ for fixed unknown values of A, B, C and for different chosen values of M.

- distinguisher for $\mathcal{P}$ from 2^{12} queries [Aumasson09];
- distinguisher for $\mathcal{P}^{-1}$ from 2 queries [Shabal, Section 11.6].

Can such distinguishers be used?

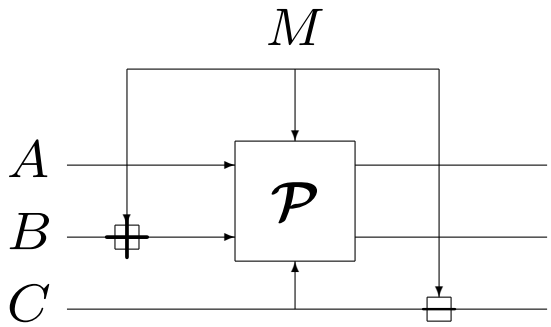

- For Shabal: **no**;
- For Weakinson with 2 loops instead of 3 and without the final update of A in $\mathcal{P}$: preimage attack with 2^{512} calls to $\mathcal{P}$ [Shabal, Section 11.6].

Security claims

For any $\ell_h \in \{192, 224, 256, 384, 512\}$.

Collision resistance.

Finding a collision for Shabal-ℓ_h requires at least $2^{\ell_h/2}$ calls to the message round function.

Preimage resistance.

Any preimage attack against Shabal-ℓ_h requires at least 2^{ℓ_h} calls to the message round function.

Second-preimage resistance.

Any second-preimage attack against Shabal-ℓ_h for messages shorter than 2^k bits requires at least $2^{\ell_h - k}$ calls to the message round function.

Resistance to length-extension attacks.

Any length-extension attack against Shabal-ℓ_h requires at least 2^{256} calls to the message round function.

Cycles/byte: AMD 64 Intel Core 2 Quad [eBASH]

	long	4096 bytes	576 bytes
Edon-R-512	3.06	3.20	3.75
Blue Midnight Wish-512	5.26	5.45	6.28
Skein-512	6.71	6.89	8.00
SHA-1	7.50	7.89	10.22
Shabal-512	**8.03**	**8.56**	**11.72**
BLAKE-64	10.06	10.53	12.08
Keccak[r=1024,c=576]	10.45	10.90	12.39
SIMD-256	11.50	11.79	13.47
CubeHash 8/16	13.46	14.65	21.84
SHA-512	14.17	14.83	17.36
Grøstl-512	30.09	31.63	37.83
MD6-512	52.60	40.61	102.14
SHAvite-3-512	111.50	115.03	124.78
LANE-512	139.97	148.46	219.31
CubeHash 8/1	213.01	214.19	221.39

Cycles/byte: x86 Intel Core 2 Duo [eBASH]

	long	4096 bytes	576 bytes
Edon-R-256	8.10	8.30	9.50
Blue Midnight Wish-256	9.86	10.11	11.50
Shabal-512	**10.22**	**10.90**	**15.04**
CubeHash 8/16	12.70	13.92	21.32
SIMD-256	13.46	13.80	15.93
BLAKE-32	20.15	20.59	23.18
Grøstl-256	22.73	23.38	27.33
SHA-256	22.98	23.47	26.43
LANE-256	26.27	27.17	32.62
SHAvite-3-256	29.38	30.04	33.76
Keccak[r=1024,c=576]	31.52	32.67	35.40
Skein-512	38.89	39.79	45.01
MD6-224	84.95	79.20	157.10
SHA-512	115.27	119.30	131.15
CubeHash 8/1	202.52	204.02	213.18

Smartcard platforms

32-bit processor.

code size: 2 kBytes

RAM: 300 bytes

for 256-byte messages: 195 cycles/byte (IV approach)

($\mathbf{2}\times$ slower than SHA-1)

8-bit 8051 smartcard.

code size: 1.2 kBytes

RAM: 192 bytes

for 256-byte messages: 2930 cycles/byte (IV approach)

($\mathbf{2.5}\times$ slower than SHA-1)

8-bit smartcard with arithmetic coprocessor.

code size: 1.2 kBytes

RAM: 256 bytes

for 256-byte messages: 625 cycles/byte (IV approach)

($\mathbf{3}\times$ slower than SHA-1)

Conclusions

http://www.flickr.com/photos/sam_herd/2620280308/

- fast, simple and efficient;
- based on a provably secure operating mode;
- important security margins;
- very few instructions requested;
- no S-box;
- fast on many different platforms.