Cisco 1721, 1760, 2621XM, 2651XM, 2691, 3725, and 3745 Modular Access Routers and 7206-VXR NPE-400 Router FIPS 140-2 Non-Proprietary Security Policy

Level 2 Validation
Version 2.3
May 7, 2004

Introduction

This is the non-proprietary Cryptographic Module Security Policy for the Cisco 1721, 1760, 2621XM, 2651XM, 2691, 3725, 3745, and 7206 VXR NPE-400 routers. This security policy describes how the routers meet the security requirements of FIPS 140-2, and how to operate the routers in a secure FIPS 140-2 mode. This policy was prepared as part of the Level 2 FIPS 140-2 certification of the routers.

FIPS 140-2 (*Federal Information Processing Standards Publication 140-2—Security Requirements for Cryptographic Modules*) details the U.S. Government requirements for cryptographic modules. More information about the FIPS 140-2 standard and validation program is available on the NIST website at

http://csrc.nist.gov/cryptval/.

This document contains the following sections:

- Introduction, page 1
- The Cisco 1721, 1760, 2621XM, 2651XM, 2691, 3725, 3745, and 7206 VXR NPE-400 Routers, page 3
- Secure Operation of the Cisco 1721, 1760, 2621XM, 2651XM, 2691, 3725, 3745, and 7206 VXR NPE-400 Routers, page 42
- Related Documentation, page 44
- Obtaining Documentation, page 45
- Documentation Feedback, page 46

Corporate Headquarters:
Cisco Systems, Inc., 170 West Tasman Drive, San Jose, CA 95134-1706 USA

Copyright © 2004 Cisco Systems, Inc. All rights reserved.

- Obtaining Technical Assistance, page 46
- Obtaining Additional Publications and Information, page 47

References

This document deals only with operations and capabilities of the 1721, 1760, 2621XM, 2651XM, 2691, 3725, 3745, and 7206 VXR NPE-400 routers in the technical terms of a FIPS 140-2 cryptographic module security policy. More information is available on the routers from the following sources:

- The Cisco Systems website contains information on the full line of products at www.cisco.com.
  - The 1700 Series product descriptions can be found at:

    http://www.cisco.com/en/US/products/hw/routers/ps221/index.html
  - The 2600 Series product descriptions can be found at:

    http://www.cisco.com/en/US/products/hw/routers/ps259/index.html
  - The 3700 Series product descriptions can be found at:

    http://www.cisco.com/en/US/products/hw/routers/ps282/index.html
  - The 7200 Series product descriptions can be found at:

    http://www.cisco.com/en/US/products/hw/routers/ps341/index.html
- For answers to technical or sales related questions please refer to the contacts listed on the Cisco Systems website at www.cisco.com.
- The NIST Validated Modules website (http://csrc.nist.gov/cryptval) contains contact information for answers to technical or sales-related questions for the module

Terminology

In this document, the Cisco 1721, 1760, 2621XM, 2651XM, 2691, 3725, 3745, and 7206 VXR NPE-400 routers are referred to as the routers, the modules, or the systems.

Document Organization

The Security Policy document is part of the FIPS 140-2 Submission Package. In addition to this document, the Submission Package contains:

- Vendor Evidence document
- Finite State Machine
- Module Software Listing
- Other supporting documentation as additional references

This document provides an overview of the routers and explains the secure configuration and operation of the modules. This introduction section is followed by the "The Cisco 1721, 1760, 2621XM, 2651XM, 2691, 3725, 3745, and 7206 VXR NPE-400 Routers" section, which details the general features and functionality of the routers. The "Secure Operation of the Cisco 1721, 1760, 2621XM, 2651XM, 2691, 3725, 3745, and 7206 VXR NPE-400 Routers" section specifically addresses the required configuration for the FIPS-mode of operation.

With the exception of this Non-Proprietary Security Policy, the FIPS 140-2 Certification Submission Documentation is Cisco-proprietary and is releasable only under appropriate non-disclosure agreements. For access to these documents, please contact Cisco Systems.

The Cisco 1721, 1760, 2621XM, 2651XM, 2691, 3725, 3745, and 7206 VXR NPE-400 Routers

Branch office networking requirements are dramatically evolving, driven by web and e-commerce applications to enhance productivity and merging the voice and data infrastructure to reduce costs. The Cisco 1721, 1760, 2621XM, 2651XM, 2691, 3725, 3745, and 7206 VXR NPE-400 modular multi-service routers offer versatility, integration, and security to branch offices. With numerous WAN Interface Cards (WICs) and Network Modules (NMs) available, the modular architecture of the Cisco router easily allows interfaces to be upgraded to accommodate network expansion. The Cisco 1721, 1760, 2621XM, 2651XM, 2691, 3725, 3745, and 7206 VXR NPE-400 provide a scalable, secure, manageable remote access server that meets FIPS 140-2 Level 2 requirements as a multiple-chip embedded module. This section describes the general features and functionality provided by the Cisco 1721, 1760, 2621XM, 2651XM, 2691, 3725, 3745, and 7206 VXR NPE-400 routers. Additional adapters (e.g. WICs and other modules) are excluded from the validation.

- The Cisco 1721/1760 Cryptographic Module, page 4
- Cisco 1721 and 1760 Module Interfaces, page 5
- The Cisco 2621XM/2651XM Cryptographic Module, page 10
- Cisco 2621XM and 2651XM Module Interfaces, page 10
- The Cisco 2691 Cryptographic Module, page 13
- Cisco 2691 Module Interfaces, page 14
- The Cisco 3725/3745 Cryptographic Module, page 18
- Cisco 3725 and 3745 Module Interfaces, page 18
- The Cisco 7206 VXR NPE-400 Cryptographic Module, page 24
- Cisco 7206 VXR NPE-400 Module Interfaces, page 25
- Roles and Services, page 27
- Physical Security, page 29
- Cryptographic Key Management, page 36
- Self-Tests, page 42

The Cisco 1721/1760 Cryptographic Module

Figure 1 The Cisco 1721 and Cisco 1760 Routers

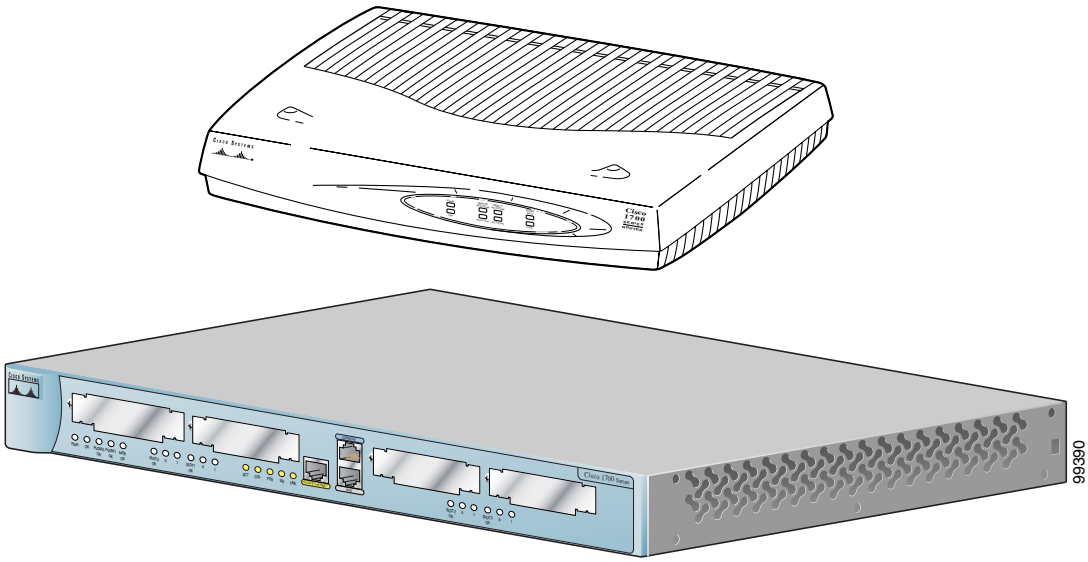

The cryptographic boundary is defined as encompassing the "top," "front," "left," "right," and "bottom" surfaces of the case; all portions of the "backplane" of the case which are not designed to accommodate a WIC; and the inverse of the three-dimensional space within the case that would be occupied by an installed WIC. The cryptographic boundary includes the connection apparatus between the WIC and the motherboard/daughterboard that hosts the WIC, but the boundary does not include the WIC itself. In other words, the cryptographic boundary encompasses all hardware components within the case of the device except any installed modular WICs. All of the functionality discussed in this document is provided by components within this cryptographic boundary.

The 1760 requires that a special opacity shield be installed over the right-hand side air vents in order to operate in FIPS-approved mode. The shield decreases the effective size of the vent holes, reducing visibility within the cryptographic boundary to FIPS-approved specifications. The shield is self-adhering to the side of the chassis. To install the shield, remove it from its paper backing and apply the shield to the chassis, aligning the holes on the shield with the vent-holes on the side of the chassis. Figure 2 demonstrates the proper application of the shield.

Figure 2 Cisco 1760 Opacity Shield Application

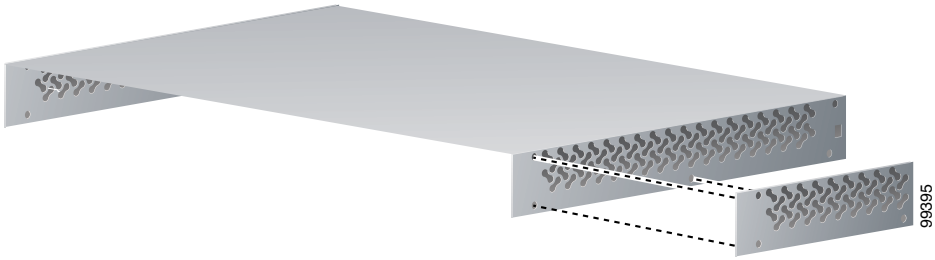

Cisco IOS features such as tunneling, data encryption, and termination of Remote Access WANs via IPSec, Layer 2 Forwarding (L2F) and Layer 2 Tunneling Protocols (L2TP) make the Cisco 1700 an ideal platform for building virtual private networks or outsourced dial solutions. Cisco 1700`s RISC-based processor provides the power needed for the dynamic requirements of the remote branch office.

Cisco 1721 and 1760 Module Interfaces

The interfaces for the router are located on the rear panel of the Cisco 1721 and the front panel of the Cisco 1760 as shown in Figure 3.

Figure 3 Cisco 1721 and Cisco 1760 Physical Interfaces

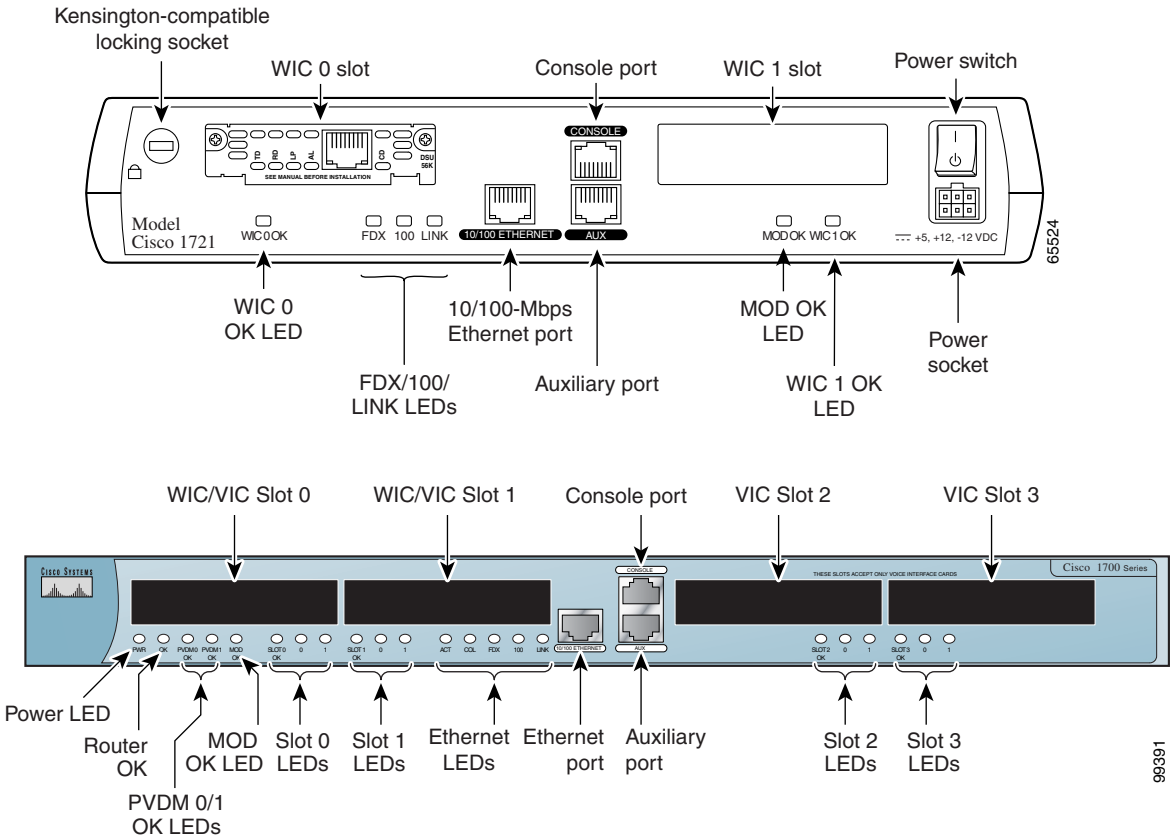

The Cisco 1721 and 1760 routers feature console and auxiliary ports, single fixed LAN interfaces, two Cisco WAN interface card (WIC) slots on the 1721, and two WIC slots and two Voice interface card (VIC) slots on the 1760. WAN interface cards support a variety of serial, ISDN BRI, and integrated CSU/DSU options for primary and backup WAN connectivity. All Cisco 1700 series routers include an auxiliary port supporting 115Kbps Dial-On-Demand Routing, ideal for back-up WAN connectivity.

A WIC is inserted into one of the WIC slots, which are located on the back panel of the 1721 and the front panel of the 1760. WICs interface directly with the processor, and cannot perform cryptographic functions; they only serve as a data input and data output physical interface.

The physical interfaces include a power plug for the power supply and a power switch. The router has one Fast Ethernet (10/100 RJ-45) connector for data transfers in and out. The module also has two other RJ-45 connectors on the back panel for a console terminal for local system access and an auxiliary port

for remote system access or dial backup using a modem. The 10/100Base-T LAN port has Link/Activity, 10/100Mbps, and half/full duplex LEDs. Figure 4 shows the LEDs located on the rear panel of the Cisco 1721 with descriptions detailed in Table 1:

Figure 4 Cisco 1721 Rear Panel LEDs

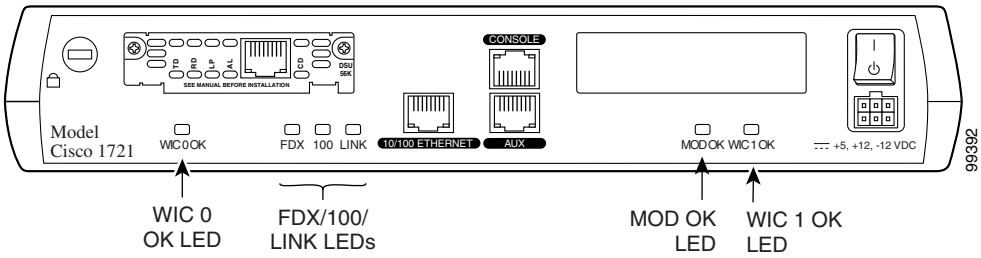

Table 1 Cisco 1721 Rear Panel LEDs and Descriptions

LED	Indication	Description
WIC 0 OK	Green	A WIC is correctly inserted in the card slot
	Off	No WIC present / WIC incorrectly inserted in the card slot
WIC 1 OK	Green	A WIC is correctly inserted in the card slot
	Off	No WIC present / WIC incorrectly inserted in the card slot
FDX	Green	The interface is transmitting data in full-duplex mode
	Off	When off, the interface is transmitting data in half-duplex mode
100 Mbps	Green	The speed of the interface is 100 Mbps
	Off	The speed of the interface is 10 Mbps or no link is established
LINK	Green	An Ethernet link has been established
	Off	No Ethernet link established
MOD OK	Green	VPN hardware encryption module is installed and recognized by Cisco IOS
	Off	VPN hardware encryption module not installed / not recognized by Cisco IOS

Figure 5 shows the front panel LEDs of the 1721 and 1760, which provide overall status of the router's operation. The front panel of the 1721 displays whether or not the router is booted, overall activity/link status, and collision information. The front panel of the 1760 displays whether or not the router is booted, overall activity/link status, collision information, and specific information for each installed interface.

Figure 5 Cisco 1721 and 1760 Front Panel LEDs

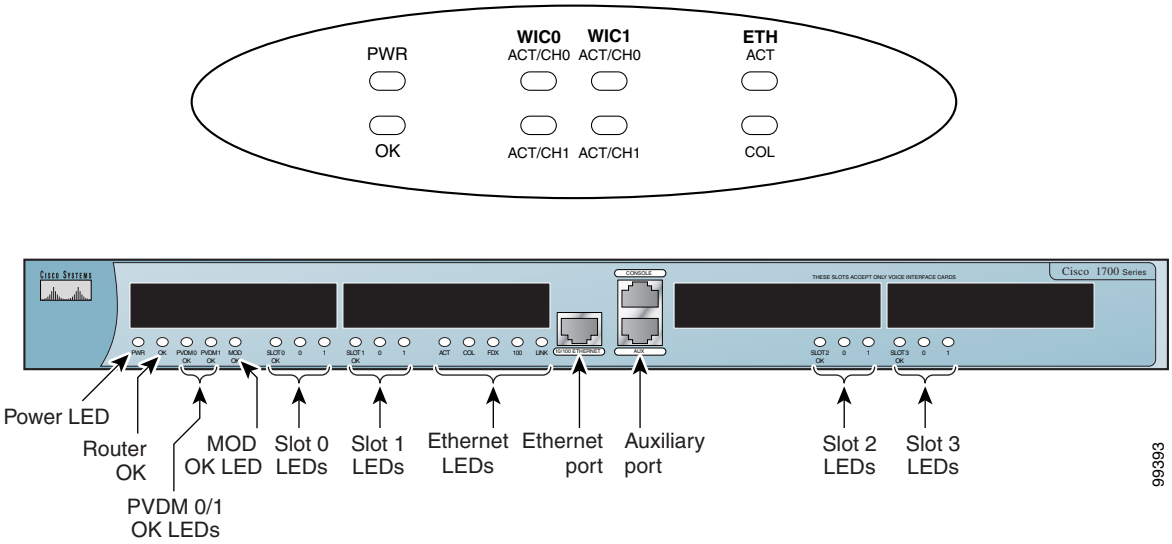

Table 2 and Table 3 provide more detailed information conveyed by the LEDs on the front panel of the Cisco 1721 and 1760 routers:

Table 2 Cisco 1721 Front Panel LEDs and Descriptions

LED	Indication	Description
PWR	Green	Power is supplied to the router
	Off	The router is not powered on
OK	Green	The router has successfully booted up and the software is functional. This LED blinks during the power-on self-test (POST)
	Off	The router has not successfully booted up
WIC 0 ACT/CH0	Green	Serial and DSU/CSU cards—Blinks when data is being sent to or received from the port on the card in the WIC0 slot
		ISDN cards—On solid when the first ISDN B channel is up for the card in the WIC0 slot
		2-port serial cards—Blinks when data is being sent to or received from the first port on the 2-port card in the WIC0 slot
WIC 0 ACT/CH1	Green	Serial and CSU/DSU cards—Remains off
		ISDN cards—On solid when the second ISDN B channel is up for the card in the WIC0 slot
		2-port serial cards—Blinks when data is being sent to or received from the second port on the 2-port card in the WIC0 slot
WIC 1 ACT/CH0	Green	Serial and DSU/CSU cards—Blinks when data is being sent to or received from the port on the card in the WIC1 slot
		ISDN cards—On solid when the first ISDN B channel is up for the card in the WIC1 slot
		2-port serial cards—Blinks when data is being sent to or received from the first port on the 2-port card in the WIC1 slot

Table 2 Cisco 1721 Front Panel LEDs and Descriptions (Continued)

LED	Indication	Description
WIC 1 ACT/CH1	Green	Serial and CSU/DSU cards—Remains off
		ISDN cards—On solid when the second ISDN B channel is up for the card in the WIC1 slot
		2-port serial cards—Blinks when data is being sent to or received from the second port on the 2-port card in the WIC1 slot
ETH ACT	Green	Blinks when there is network activity on the Ethernet port
ETH COL	Yellow	Blinks when there are packet collisions on the local Ethernet network

Table 3 Cisco 1760 Front Panel LEDs and Descriptions

LED	Indication	Description
PWR	Green	Power is supplied to the router
	Off	The router is not powered on
OK	Green	The router has successfully booted up and the software is functional. This LED blinks during the power-on self-test (POST)
	Off	The router has not successfully booted up
PVDM 0 OK	Green	On when a packet voice data module (PVDM) is correctly inserted in PVDM card slot 0
PVDM 1 OK	Green	n when a packet voice data module (PVDM) is correctly inserted in PVDM card slot 1
MOD OK	Green	On when a VPN module is present
FDX	Green	The interface is transmitting data in full-duplex mode
	Off	When off, the interface is transmitting data in half-duplex mode
100 Mbps	Green	The speed of the interface is 100 Mbps
	Off	The speed of the interface is 10 Mbps or no link is established
LINK	Green	An Ethernet link has been established
	Off	No Ethernet link established
SLOT 0 OK	Green	On when either a WIC or a VIC is correctly inserted in the card slot
0	Green	ISDN—On when the first ISDN B channel is connected
		Serial, CSU/DSU, and VIC—Blinks when data is being sent to or received from port 0 in slot 0. For the VIC-2BRI-ST-NT/TE, blinks when data is being sent to or received from any of the B channels
1	Green	ISDN—On when the second ISDN B channel is connected
		Serial and VIC—Blinks when data is being sent to or received from port 1 in slot 0
SLOT 1 OK	Green	On when either a WIC or a VIC is correctly inserted in the card slot
0	Green	ISDN—On when the first ISDN B channel is connected
		Serial, CSU/DSU, and VIC—Blinks when data is being sent to or received from port 0 in slot 1

Table 3 Cisco 1760 Front Panel LEDs and Descriptions (Continued)

LED	Indication	Description
1	Green	ISDN—On when the second ISDN B channel is connected
		Serial and VIC—Blinks when data is being sent to or received from port 1 in slot 1
SLOT 2 OK	Green	On when a VIC is correctly inserted in the card slot
0	Green	VIC—Blinks when data is being sent to or received from port 0 in slot 2
1	Green	VIC—Blinks when data is being sent to or received from port 1 in slot 2
SLOT 3 OK	Green	On when a VIC is correctly inserted in the card slot
0	Green	VIC—Blinks when data is being sent to or received from port 0 in slot 3
1	Green	VIC—Blinks when data is being sent to or received from port 1 in slot 3

All of these physical interfaces are separated into the logical interfaces from FIPS 140-2 as described in the Table 4:

Table 4 Cisco 1721 and Cisco 1760 FIPS 140-2 Logical Interfaces

Router Physical Interface	FIPS 140-2 Logical Interface
10/100BASE-TX LAN Port WIC/VIC Interface Console Port Auxiliary Port	Data Input Interface
10/100BASE-TX LAN Port WIC/VIC Interface Console Port Auxiliary Port	Data Output Interface
10/100BASE-TX LAN Port WIC/VIC Interface Power Switch Console Port Auxiliary Port	Control Input Interface
10/100BASE-TX LAN Port WIC/VIC Interface LAN Port LEDs 10/100BASE-TX LAN Port LEDs Power LED Activity LED Console Port Auxiliary Port	Status Output Interface
Power Plug	Power Interface

The Cisco 2621XM/2651XM Cryptographic Module

Figure 6 The Cisco 2621XM/2651XM Router

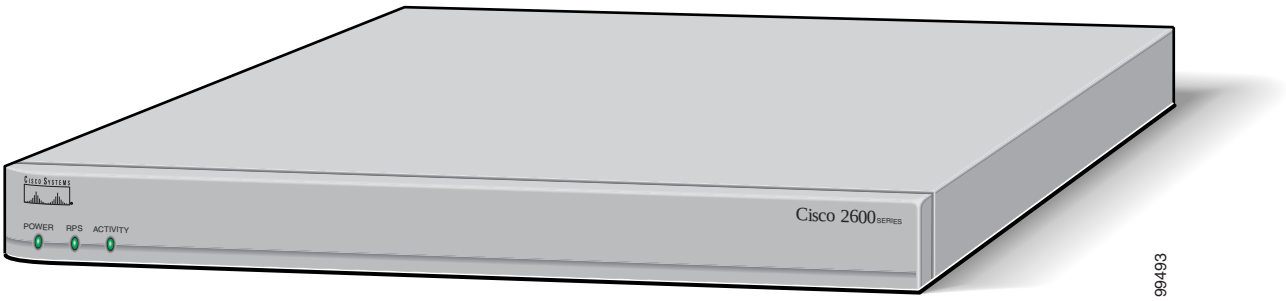

The cryptographic boundary is defined as encompassing the "top," "front," "left," "right," and "bottom" surfaces of the case; all portions of the "backplane" of the case which are not designed to accommodate a WIC or Network Module; and the inverse of the three-dimensional space within the case that would be occupied by an installed WIC or Network Module. The cryptographic boundary includes the connection apparatus between the WIC or Network Module and the motherboard/daughterboard that hosts the WIC or Network Module, but the boundary does not include the WIC or Network Module itself. In other words, the cryptographic boundary encompasses all hardware components within the case of the device except any installed modular WICs or Network Modules. All of the functionality discussed in this document is provided by components within this cryptographic boundary.

Cisco IOS features such as tunneling, data encryption, and termination of Remote Access WANs via IPSec, Layer 2 Forwarding (L2F) and Layer 2 Tunneling Protocols (L2TP) make the Cisco 2600 an ideal platform for building virtual private networks or outsourced dial solutions. Cisco 2600`s RISC-based processor provides the power needed for the dynamic requirements of the remote branch office, achieving wire speed Ethernet to Ethernet routing with up to 30 thousand packets per second (Kpps) throughput capacity for the 2621XM, and 40 Kpps for the 2651XM.

Cisco 2621XM and 2651XM Module Interfaces

The interfaces for the router are located on the rear panel as shown in Figure 7.

Figure 7 Cisco 2621XM and Cisco 2651XM Physical Interfaces

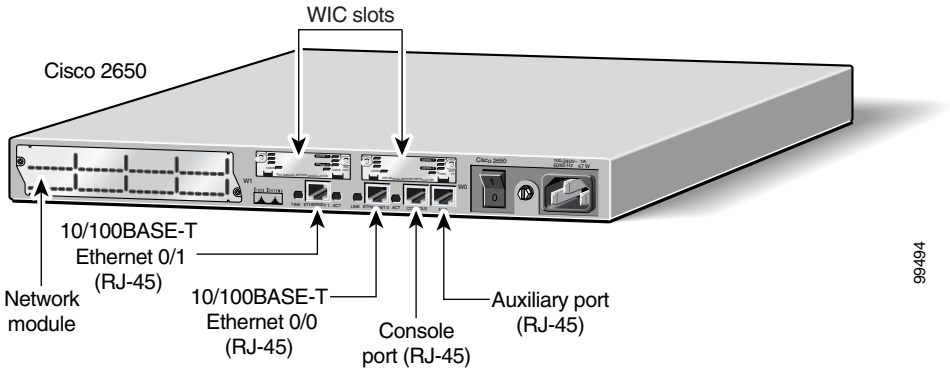

The Cisco 2621XM and 2651XM routers feature a console port, an auxiliary port, dual fixed LAN interfaces, a Network Module slot, and two WIC slots.

LAN support includes single and dual Ethernet options; 10/100 Mbps auto-sensing Ethernet; mixed Token-Ring and Ethernet; and single Token Ring chassis versions.

WAN interface cards support a variety of serial, ISDN BRI, and integrated CSU/DSU options for primary and backup WAN connectivity. Available Network Modules support multi-service voice/data/fax integration, departmental dial concentration, and high-density serial options

All Cisco 2600 series routers include an auxiliary port supporting 115Kbps Dial-On-Demand Routing, ideal for back-up WAN connectivity.

When a Network Module is inserted, it fits into an adapter called the *Network Module expansion bus*. The expansion bus interacts with the PCI bridge in the same way that the fixed LAN ports do; therefore, no critical security parameters pass through the Network Module (just as they don't pass through the LAN ports). Network modules do not perform any cryptographic functions.

WICs are similar to Network Modules in that they greatly increase the router's flexibility. A WIC is inserted into one of two slots, which are located above the fixed LAN ports. WICs interface directly with the processor. They do not interface with the cryptographic card; therefore no security parameters will pass through them. WICs cannot perform cryptographic functions; they only serve as a data input and data output physical interface.

The physical interfaces include a power plug for the power supply and a power switch. The router has two Fast Ethernet (10/100 RJ-45) connectors for data transfers in and out. The module also has two other RJ-45 connectors on the back panel for a console terminal for local system access and an auxiliary port for remote system access or dial backup using a modem. The 10/100Base-T LAN ports have Link/Activity, 10/100Mbps, and half/full duplex LEDs. Figure 8 shows the LEDs located on the rear panel with descriptions detailed in Table 5:

Figure 8 Cisco 2621XM and Cisco 2651XM Rear Panel LEDs

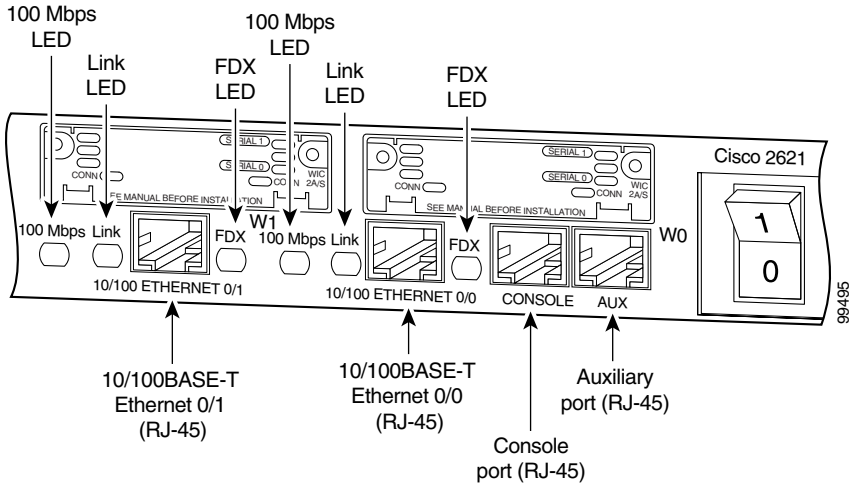

Table 5 Cisco 2621XM and Cisco 2651XM Rear Panel LEDs and Descriptions

LED	Indication	Description
LINK	Green	An Ethernet link has been established
	Off	No Ethernet link established
FDX	Green	The interface is transmitting data in full-duplex mode
	Off	When off, the interface is transmitting data in half-duplex mode
100 Mbps	Green	The speed of the interface is 100 Mbps
	Off	The speed of the interface is 10 Mbps or no link is established

Figure 9 shows the front panel LEDs, which provide overall status of the router's operation. The front panel displays whether or not the router is booted, if the redundant power is (successfully) attached and operational, and overall activity/link status.

Figure 9 Cisco 2621XM and Cisco 2651XM Front Panel LEDs

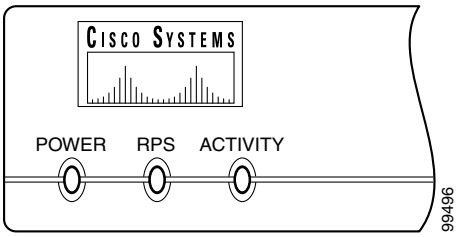

Table 6 provides more detailed information conveyed by the LEDs on the front panel of the router:

Table 6 Cisco 2621XM and Cisco 2651XM Front Panel LEDs and Descriptions

LED	Indication	Description
Power	Green	Power is supplied to the router and the router is operational
	Off	The router is not powered on
RPS[1]	Green	RPS is attached and operational
	Off	No RPS is attached
	Blink	RPS is attached, but has a failure
Activity	Off	In the Cisco IOS software, but no network activity
	Blink (500 ms ON, 500 ms OFF)	In ROMMON, no errors
	Blink (500 ms ON, 500 ms OFF, 2 sec between codes)	In ROMMON, error detected
	Blink (less than 500 ms)	In the Cisco IOS software, the blink rate reflects the level of activity

1. RPS = Redundant Power System

All of these physical interfaces are separated into the logical interfaces from FIPS 140-2 as described in Table 7:

Table 7 Cisco 2621XM and Cisco 2651XM FIPS 140-2 Logical Interfaces

Router Physical Interface	FIPS 140-2 Logical Interface
10/100BASE-TX LAN Port WIC Interface Network Module Interface Console Port Auxiliary Port	Data Input Interface
10/100BASE-TX LAN Port WIC Interface Network Module Interface Console Port Auxiliary Port	Data Output Interface
10/100BASE-TX LAN Port WIC Interface Network Module Interface Power Switch Console Port Auxiliary Port	Control Input Interface
10/100BASE-TX LAN Port WIC Interface Network Module Interface LAN Port LEDs 10/100BASE-TX LAN Port LEDs Power LED Redundant Power LED Activity LED Console Port Auxiliary Port	Status Output Interface
Power Plug	Power Interface

The Cisco 2691 Cryptographic Module

Figure 10 The Cisco 2691 Router

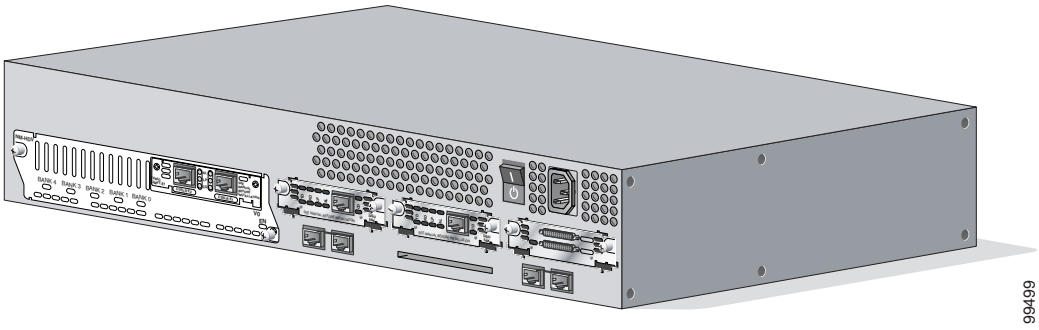

The cryptographic boundary is defined as encompassing the "top," "front," "left," "right," and "bottom" surfaces of the case; all portions of the "backplane" of the case which are not designed to accommodate a WIC or Network Module; and the inverse of the three-dimensional space within the case that would be occupied by an installed WIC or Network Module. The cryptographic boundary includes the connection apparatus between the WIC or Network Module and the motherboard/daughterboard that hosts the WIC or Network Module, but the boundary does not include the WIC or Network Module itself. In other words, the cryptographic boundary encompasses all hardware components within the case of the device except any installed modular WICs or Network Modules. All of the functionality discussed in this document is provided by components within this cryptographic boundary.

Cisco IOS features such as tunneling, data encryption, and termination of Remote Access WANs via IPSec, Layer 2 Forwarding (L2F) and Layer 2 Tunneling Protocols (L2TP) make the Cisco 2600 an ideal platform for building virtual private networks or outsourced dial solutions. Cisco 2600`s RISC-based processor provides the power needed for the dynamic requirements of the remote branch office, achieving wire speed Ethernet to Ethernet routing with up to 70 thousand packets per second (Kpps) throughput capacity.

Cisco 2691 Module Interfaces

The interfaces for the router are located on the rear panel as shown in Figure 11.

Figure 11 Cisco 2691 Physical Interfaces

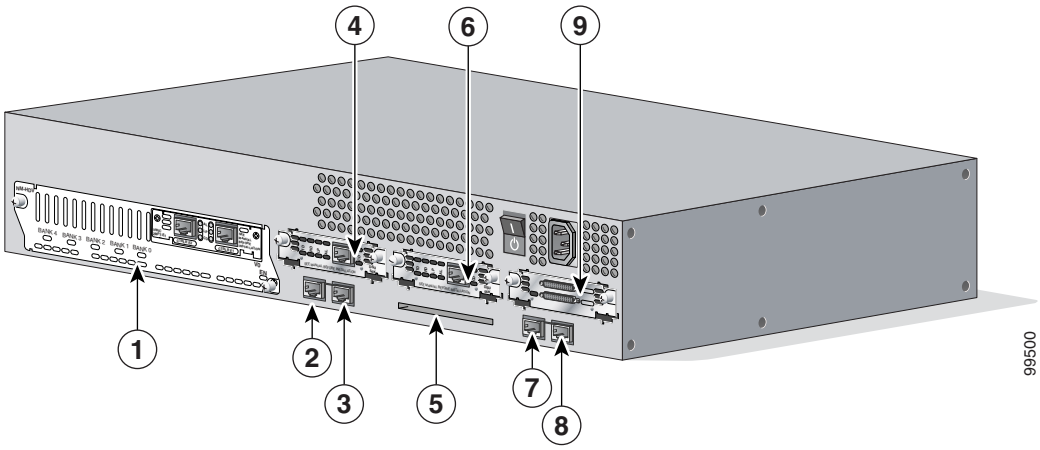

The Cisco 2691 router features console and auxiliary ports, dual fixed LAN interfaces, a Network Module slot, two Cisco WAN interface card (WIC) slots, and a Compact Flash slot.

LAN support includes single and dual Ethernet options; 10/100 Mbps auto-sensing Ethernet; mixed Token-Ring and Ethernet; and single Token Ring chassis versions. WAN interface cards support a variety of serial, ISDN BRI, and integrated CSU/DSU options for primary and backup WAN connectivity, while available Network Modules support multi-service voice/data/fax integration, departmental dial concentration, and high-density serial options. The AIM slot supports integration of advanced services such as hardware-assisted data compression and encryption. All Cisco 2600 series routers include an auxiliary port supporting 115Kbps Dial-On-Demand Routing, ideal for back-up WAN connectivity.

When a Network Module is inserted, it fits into an adapter called the *Network Module expansion bus*. The expansion bus interacts with the PCI bridge in the same way that the fixed LAN ports do; therefore, no critical security parameters pass through the Network Module (just as they don't pass through the LAN ports). Network modules do not perform any cryptographic functions.

WICs are similar to Network Modules in that they greatly increase the router's flexibility. A WIC is inserted into one of two slots, which are located above the fixed LAN ports. WICs interface directly with the processor. They do not interface with the cryptographic card; therefore no security parameters will pass through them. WICs cannot perform cryptographic functions; they only serve as a data input and data output physical interface.

The physical interfaces include a power plug for the power supply and a power switch. The router has two Fast Ethernet (10/100 RJ-45) connectors for data transfers in and out. The module also has two other RJ-45 connectors on the back panel for a console terminal for local system access and an auxiliary port for remote system access or dial backup using a modem. The 10/100Base-T LAN ports have Link/Activity, 10/100Mbps, and half/full duplex LEDs. Figure 12 shows the LEDs located on the rear panel with descriptions detailed in Table 8:

Figure 12 Cisco 2691 Rear Panel LEDs

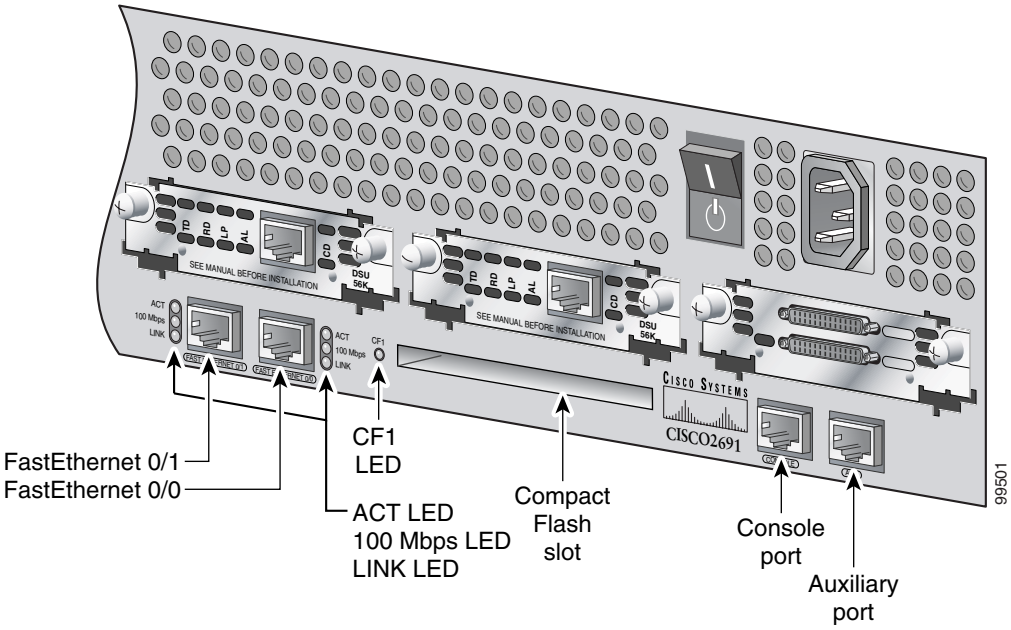

Table 8 Cisco 2691 Rear Panel LEDs and Descriptions

LED	Indication	Description
LINK	On	An Ethernet link has been established
	Off	No Ethernet link established
ACT	On	The interface is transmitting or receiving packets
	Off	The interface is not transmitting or receiving packets
100 Mbps	On	The speed of the interface is 100 Mbps
	Off	The speed of the interface is 10 Mbps or no link is established
CF1	On	The Flash device is being accessed in either READ or WRITE mode
	Off	The Flash device is not being accessed

Figure 13 shows the front panel LEDs, which provide overall status of the router's operation. The front panel displays whether or not the router is booted, if the redundant power is (successfully) attached and operational, and overall activity/link status.

Figure 13 Cisco 2691 Front Panel LEDs

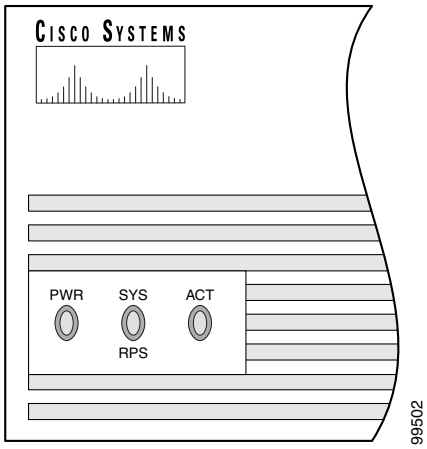

Table 9 provides more detailed information conveyed by the LEDs on the front panel of the router:

Table 9 Cisco 2691 Front Panel LEDs and Descriptions

LED	Indication	Description
PWR	On	Power is supplied to the router
	Off	The router is not powered on
SYS/RPS	Rapid blinking	System is booting
	Slow blinking	System error
	On	System OK
ACT	Off	No system activity
	Blinking	System activity

All of these physical interfaces are separated into the logical interfaces from FIPS 140-2 as described in Table 10:

Table 10 Cisco 2691 FIPS 140-2 Logical Interfaces

Router Physical Interface	FIPS 140-2 Logical Interface
10/100BASE-TX LAN Port WIC Interface Network Module Interface Console Port Auxiliary Port Compact Flash slot	Data Input Interface
10/100BASE-TX LAN Port WIC Interface Network Module Interface Console Port Auxiliary Port Compact Flash slot	Data Output Interface
10/100BASE-TX LAN Port WIC Interface Network Module Interface Power Switch Console Port Auxiliary Port	Control Input Interface
10/100BASE-TX LAN Port WIC Interface Network Module Interface LAN Port LEDs 10/100BASE-TX LAN Port LEDs Power LED Activity LED Console Port Auxiliary Port	Status Output Interface
Power Plug	Power Interface

The Cisco 3725/3745 Cryptographic Module

Figure 14 The Cisco 3725 and Cisco 3745 Routers

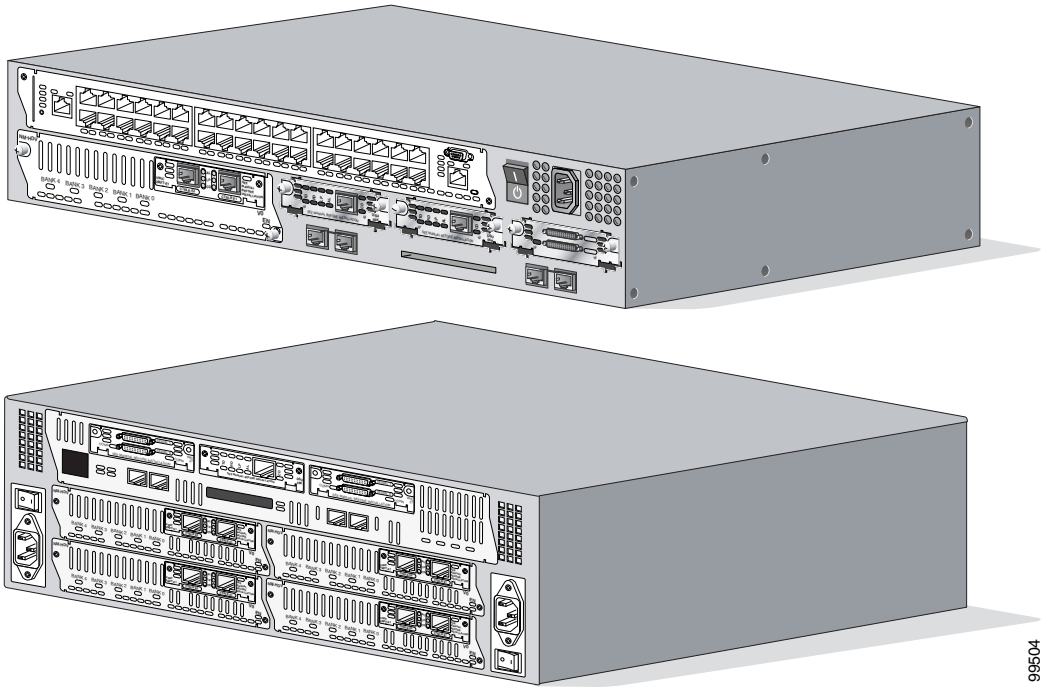

The cryptographic boundary is defined as encompassing the "top," "front," "left," "right," and "bottom" surfaces of the case; all portions of the "backplane" of the case which are not designed to accommodate a WIC or Network Module; and the inverse of the three-dimensional space within the case that would be occupied by an installed WIC or Network Module. The cryptographic boundary includes the connection apparatus between the WIC or Network Module and the motherboard/daughterboard that hosts the WIC or Network Module, but the boundary does not include the WIC or Network Module itself. In other words, the cryptographic boundary encompasses all hardware components within the case of the device except any installed modular WICs or Network Modules. All of the functionality discussed in this document is provided by components within this cryptographic boundary.

Cisco IOS features such as tunneling, data encryption, and termination of Remote Access WANs via IPSec, Layer 2 Forwarding (L2F) and Layer 2 Tunneling Protocols (L2TP) make the Cisco 3700 an ideal platform for building virtual private networks or outsourced dial solutions. Cisco 3700`s RISC-based processor provides the power needed for the dynamic requirements of the remote branch office, achieving wire speed Ethernet to Ethernet routing with up to 100 thousand packets per second (Kpps) throughput capacity for the 3725, and 225 Kpps for the 3745.

Cisco 3725 and 3745 Module Interfaces

The interfaces for the router are located on the rear panel as shown in Figure 15.

Figure 15 Cisco 3725 and Cisco 3745 Physical Interfaces

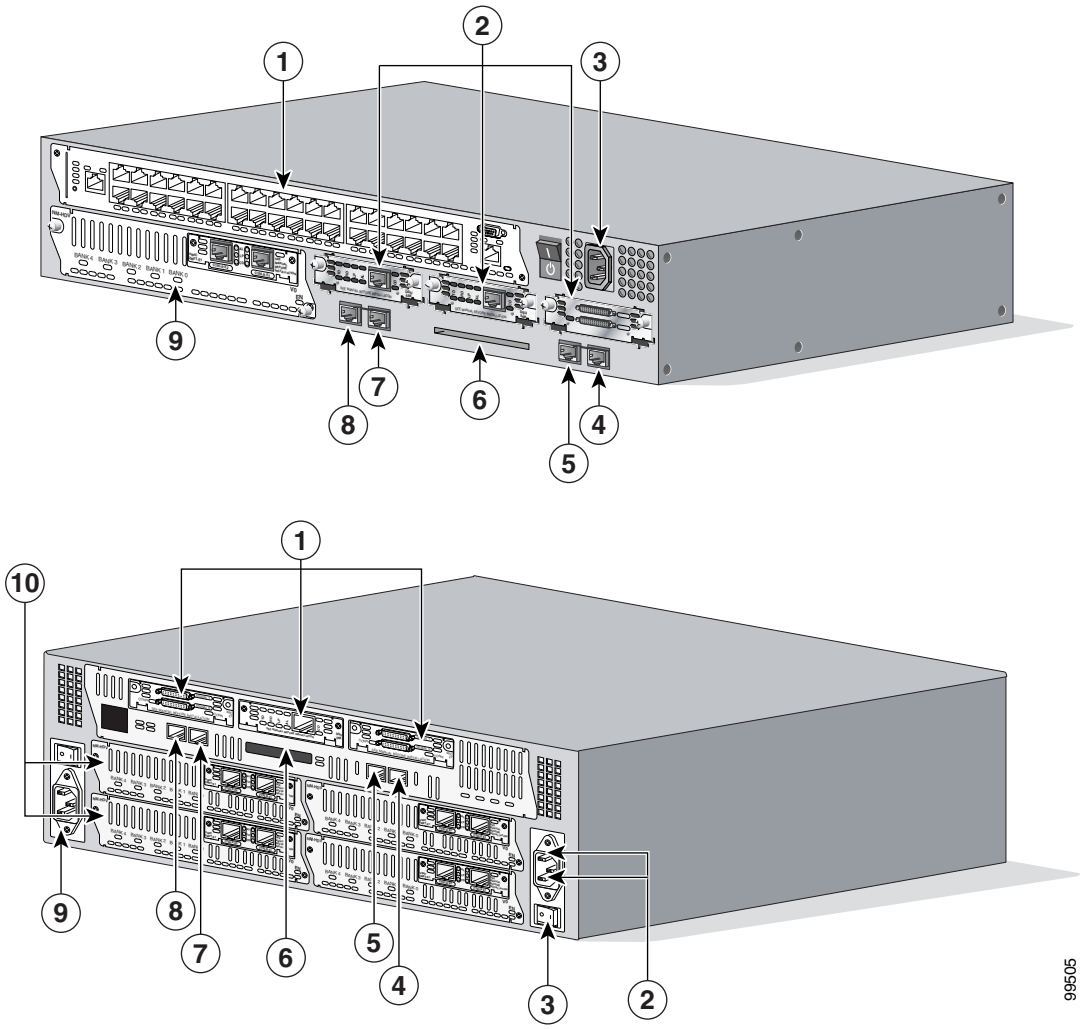

1	Interface Card Slots	**5**	FastEthernet 0/1
2	Network Modules	**6**	Compact Flash Slot
3	Power Supply	**7**	Auxiliary Port
4	FastEthernet 0/0	**8**	Console Port

The Cisco 3725 and 3745 routers feature console and auxiliary ports, dual fixed LAN interfaces, two network module slots on the 3725 and four on the 3745, three Cisco WAN interface card (WIC) slots, and a Compact Flash slot.

LAN support includes single and dual Ethernet options; 10/100 Mbps auto-sensing Ethernet; mixed Token-Ring and Ethernet; and single Token Ring chassis versions. WAN interface cards support a variety of serial, ISDN BRI, and integrated CSU/DSU options for primary and backup WAN connectivity, while available network modules support multi-service voice/data/fax integration, departmental dial concentration, and high-density serial options. All Cisco 3700 series routers include an auxiliary port supporting 115Kbps Dial-On-Demand Routing, ideal for back-up WAN connectivity.

When a network module is inserted, it fits into an adapter called the network module expansion bus. The expansion bus interacts with the PCI bridge in the same way that the fixed LAN ports do; therefore, no critical security parameters pass through the network module (just as they don't pass through the LAN ports). Network modules do not perform any cryptographic functions.

WICs are similar to network modules in that they greatly increase the router's flexibility. A WIC is inserted into one of two slots, which are located above the fixed LAN ports. WICs interface directly with the processor. They do not interface with the cryptographic card; therefore no security parameters will pass through them. WICs cannot perform cryptographic functions; they only serve as a data input and data output physical interface.

The physical interfaces include a power plug for the power supply and a power switch. The router has two Fast Ethernet (10/100 RJ-45) connectors for data transfers in and out. The module also has two other RJ-45 connectors on the back panel for a console terminal for local system access and an auxiliary port for remote system access or dial backup using a modem. The 10/100Base-T LAN ports have Link/Activity, 10/100Mbps, and half/full duplex LEDs. Figure 16 shows the LEDs located on the rear panel with descriptions detailed in Table 11 and Table 12:

Figure 16 Cisco 3725 and Cisco 3745 Rear Panel LEDs

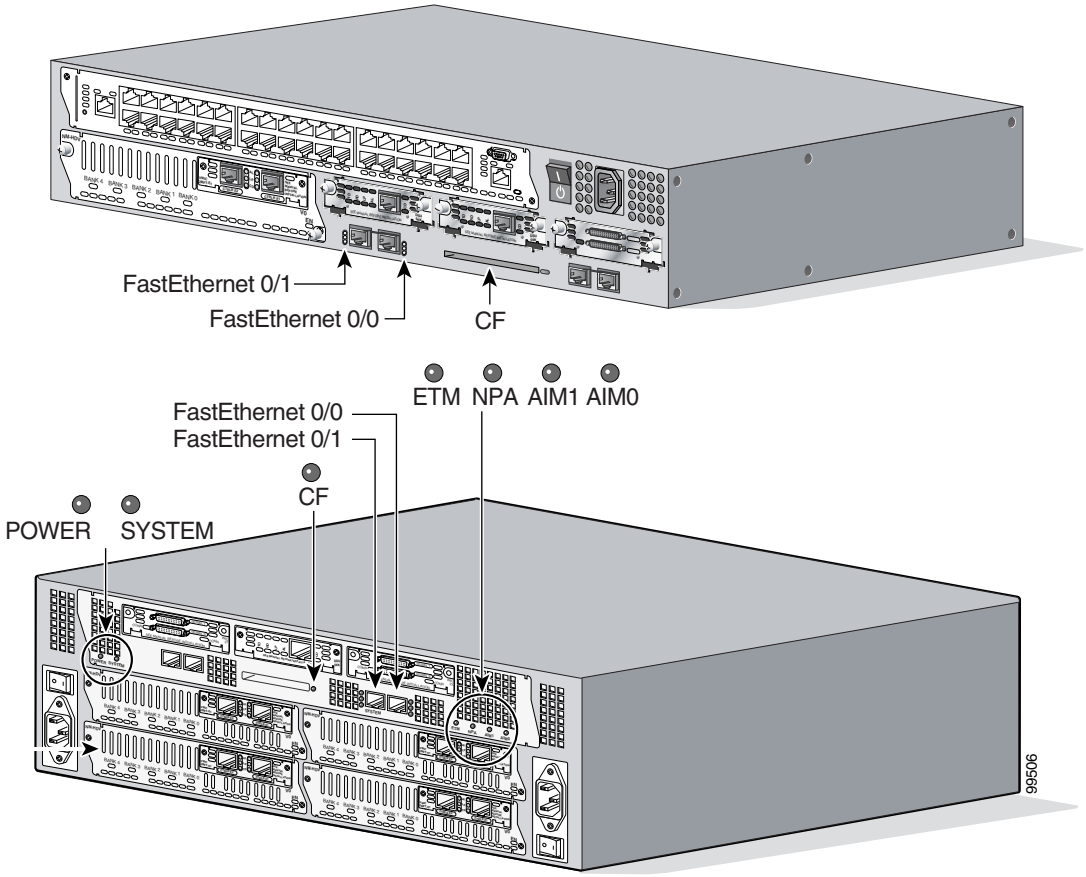

Table 11 Cisco 3725 Rear Panel LEDs and Descriptions

LED	Indication	Description
CF	Solid or blinking green	Do not eject Compact Flash (CF); device is busy
	Off	CF can be ejected; device is idle
FastEthernet 0/0 ACT and FastEthernet 0/1 ACT	Solid or blinking green	Interface receiving packets
	Off	Interface not receiving packets
FastEthernet 0/0 LINK and FastEthernet 0/1 LINK	Solid green	An Ethernet link has been established
	Off	No Ethernet link established
FastEthernet 0/0 100Mbps and FastEthernet 0/1 100Mbps	Solid green	The speed of the interface is 10 Mbps or no link is established
	Off	The speed of the interface is 100 Mbps

Table 12 Cisco 3745 Rear Panel LEDs and Descriptions

LED	Indication	Description
POWER	Solid green	Operating voltages on mainboard are within acceptable ranges
	Off	Error condition is detected in the operating ranges
SYS	Solid green	Router operating normally
	Blinking green	Router running ROM monitor; no errors detected
	Amber	Router receiving power but malfunctioning
	Off	Router not receiving power
CF	Solid or blinking green	Do not eject Compact Flash (CF); device is busy
	Off	CF can be ejected; device is idle
FastEthernet 0/0 ACT and FastEthernet 0/1 ACT	Solid or blinking green	Interface receiving packets
	Off	Interface not receiving packets
FastEthernet 0/0 LINK and FastEthernet 0/1 LINK	Solid green	An Ethernet link has been established
	Off	No Ethernet link established
FastEthernet 0/0 100Mbps and FastEthernet 0/1 100Mbps	Solid green	The speed of the interface is 10 Mbps or no link is established
	Off	The speed of the interface is 100 Mbps
ETM	Solid green	Enhanced timing module (ETM) present and enabled
	Amber	ETM present with failure
	Off	ETM not present
NPA	Not used	Reserved for future development
AIM0 and AIM1	Solid green	Advanced Integration Module (AIM) present and enabled
	Amber	AIM present with failure
	Off	AIM not present

Figure 17 Cisco 3725 and Cisco 3745 Front Panel LEDs

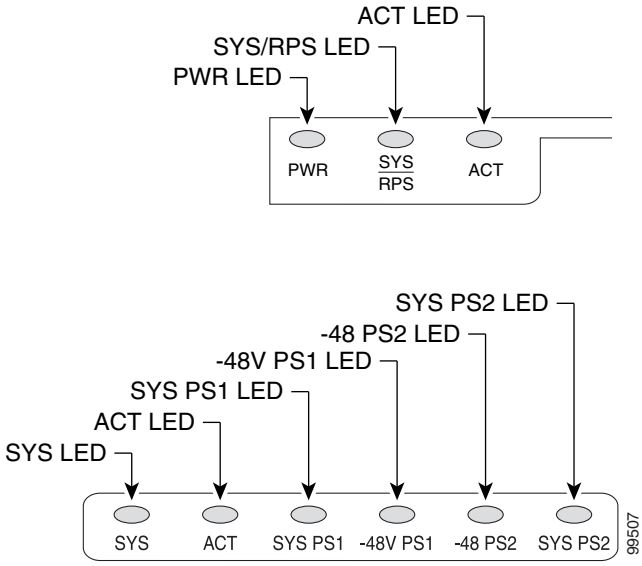

Figure 17 shows the front panel LEDs, which provide overall status of the router's operation. The front panel displays whether or not the router is booted, if the redundant power is (successfully) attached and operational, and overall activity/link status.

Table 13 and Table 14 provide more detailed information conveyed by the LEDs on the front panel of the routers:

Table 13 Cisco 3725 Front Panel LEDs and Descriptions

LED	Indication	Description
PWR	Solid green	Router is receiving power
	Off	Router is not receiving power
SYS/RPS	Solid green	System is operating normally
	Rapid blinking	System is booting up or in ROM monitor mode
	Blinking once per second	Redundant power system has failed
	Off	Router is not receiving power
ACT	Blinking	System is actively transferring packets
	Off	No packet transfers are occurring

Table 14 Cisco 3745 Front Panel LEDs and Descriptions

LED	Indication	Description
SYS	Solid green	System is operating normally
	Blinking green	Running ROM monitor with no errors detected
	Amber	Router is receiving power but malfunctioning
	Off	Router is not receiving power

Table 14 Cisco 3745 Front Panel LEDs and Descriptions (Continued)

LED	Indication	Description
ACT	Solid or blinking green	System is receiving interrupts, or is actively transferring packets
	Off	No interrupts or packet transfers are occurring
SYS PS1 and SYS PS2	Solid green	Power supply installed and operating normally
	Amber	Power supply installed and powered off, or fault condition occurred
	Off	Power supply not present, or failed
-48V PS1 and -48V PS2	Solid green	-48V power module installed and operating normally
	Amber	-48V power module installed and powered off, or fault condition occurred
	Off	-48V power module not present, or failed

All of these physical interfaces are separated into the logical interfaces from FIPS 140-2 as described in Table 15:

Table 15 Cisco 3725 and Cisco 3745 FIPS 140-2 Logical Interfaces

Router Physical Interface	FIPS 140-2 Logical Interface
10/100BASE-TX LAN Port WIC Interface Network Module Interface Console Port Auxiliary Port Compact Flash slot	Data Input Interface
10/100BASE-TX LAN Port WIC Interface Network Module Interface Console Port Auxiliary Port Compact Flash slot	Data Output Interface
10/100BASE-TX LAN Port WIC Interface Network Module Interface Power Switch Console Port Auxiliary Port	Control Input Interface

Table 15 Cisco 3725 and Cisco 3745 FIPS 140-2 Logical Interfaces (Continued)

Router Physical Interface	FIPS 140-2 Logical Interface
10/100BASE-TX LAN Port WIC Interface Network Module Interface LAN Port LEDs 10/100BASE-TX LAN Port LEDs Power LED System LED Activity LED Console Port Auxiliary Port	Status Output Interface
Power Plug	Power Interface

In addition to the built-in interfaces, the router also has over 100 network cards that can optionally be placed in an available slot. These networks cards have many embodiments, including multiple Ethernet, token ring, and modem cards to handle frame relay, ATM, and ISDN connections.

The Cisco 7206 VXR NPE-400 Cryptographic Module

The cryptographic boundary is defined as encompassing the "top," "backplane," "left," "right," and "bottom" surfaces of the case; all portions of the "front" of the case which are not designed to accommodate a port adapter; and the inverse of the three-dimensional space within the case that would be occupied by an installed port adapter. The cryptographic boundary includes the connection apparatus between the port adapter and the motherboard/daughterboard that hosts the port adapter, but the boundary does not include the port adapter itself. In other words, the cryptographic boundary encompasses all hardware components within the case of the device except any installed modular port adapters. All of the functionality discussed in this document is provided by components within this cryptographic boundary.

The Cisco 7206VXR supports multi-protocol routing and bridging with a wide variety of protocols and port adapter combinations available for Cisco 7200 series routers. The Cisco 7206VXR has six slots for port adapters, one slot for an input/output (I/O) controller, and one slot for a network processing engine or network services engine.

Figure 18 The Cisco 7206 VXR NPE-400 Router

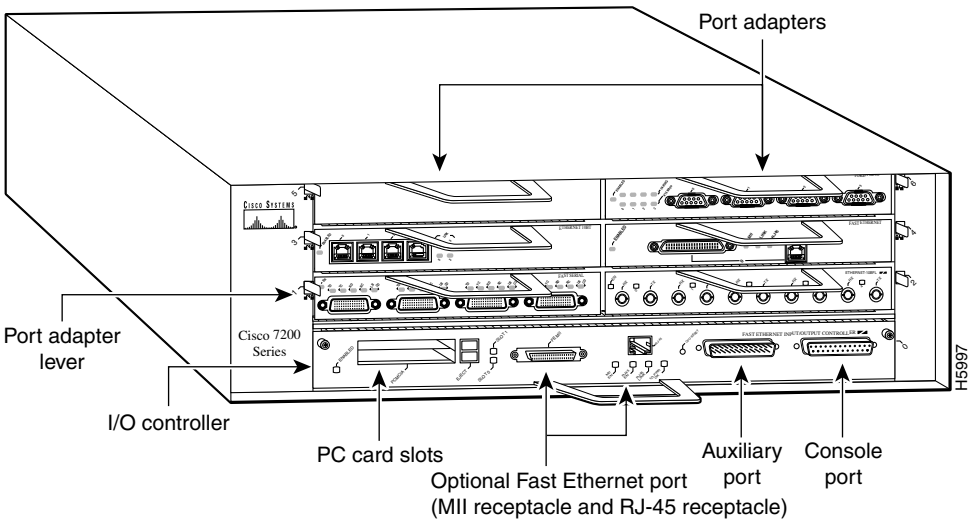

The NPE-400 uses an RM7000 microprocessor that operates at an internal clock speed of 350 MHz. The NPE-400 uses SDRAM for storing all packets received or sent from network interfaces. The SDRAM memory array in the system allows concurrent access by port adapters and the processor. The NPE-400 has three levels of cache: a primary and a secondary cache that are internal to the microprocessor, and a tertiary 4-MB external cache that provides additional high-speed storage for data and instructions.

The Cisco 7206VXR router comes equipped with one 280W AC-input power supply. (A 280W DC-input power supply option is available.) A power supply filler plate is installed over the second power supply bay. A fully configured Cisco 7206VXR router operates with only one installed power supply; however, a second, optional power supply of the same type provides hot-swappable, load-sharing, redundant power.

Cisco 7206 VXR NPE-400 Module Interfaces

The interfaces for the router are located on the front panel Input/Output (I/O) Controller, with the exception of the power switch and power plug. The module has two Fast Ethernet (10/100 RJ-45) connectors for data transfers in and out. The module also has two other RJ-45 connectors for a console terminal for local system access and an auxiliary port for remote system access or dial backup using a modem.

Figure 19 shows the front panel LEDs, which provide overall status of the router operation. The front panel displays whether or not the router is booted, if the redundant power is attached and operational, and overall activity/link status.

Figure 19 Cisco 7206 VXR NPE-400 I/O Controller

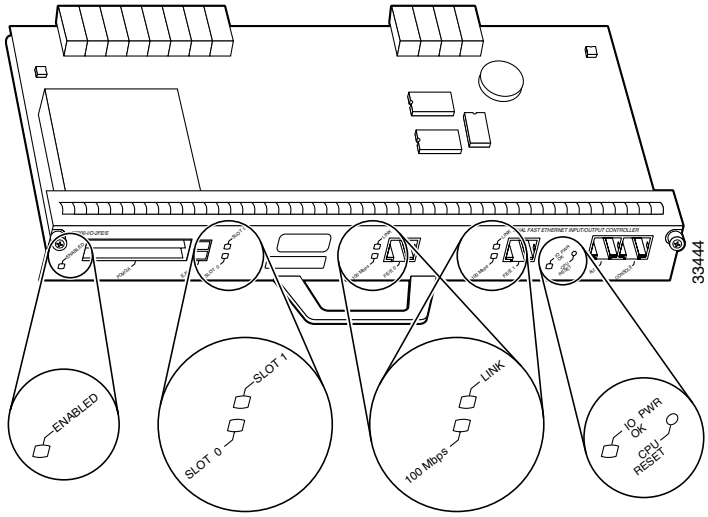

Table 16 provides detailed information conveyed by the LEDs on the front panel of the I/O Controller.

Table 16 Cisco 7206 VXR NPE-400 Front Panel LEDs and Descriptions

LED	Indication	Description
Enabled	Green	Indicates that the network processing engine or network services engine and the I/O controller are enabled for operation by the system; however, it does not mean that the Fast Ethernet port on the I/O controller is functional or enabled. This LED goes on during a successful router boot and remains on during normal operation of the router.
IO POWER OK	Amber	Indicates that the I/O controller is on and receiving DC power from the router midplane. This LED comes on during a successful router boot and remains on during normal operation of the router.
	Off	Powered off or failed.
Slot 0 Slot 1	Green	These LEDs indicate which PC Card slot is in use by coming on when either slot is being accessed by the system. These LEDs remain off during normal operation of the router.
Link	Green	Indicates that the Ethernet RJ-45 receptacle has established a valid link with the network.
	Off	This LED remains off during normal operation of the router unless there is an incoming carrier signal
100 Mbps	Green	Indicates that the port is configured for 100-Mbps operation (speed 100), or if configured for autonegotiation (speed auto), the port has detected a valid link at 100 Mbps.
	Off	If the port is configured for 10-Mbps operation, or if it is configured for autonegotiation and the port has detected a valid link at 10 Mbps, the LED remains off.

All of these physical interfaces are separated into the logical interfaces from FIPS as described in Table 17.

Table 17 Cisco 7206 VXR NPE-400 FIPS 140-1 Logical Interfaces

Router Physical Interface	FIPS 140-1 Logical Interface
10/100BASE-TX LAN Port Port Adapter Interface Console Port Auxiliary Port PCMCIA Slot	Data Input Interface
10/100BASE-TX LAN Port Port Adapter Interface Console Port Auxiliary Port PCMCIA Slot	Data Output Interface
Power Switch Console Port Auxiliary Port	Control Input Interface
10/100BASE-TX LAN Port LEDs Enabled LED PCMCIA LEDs IO Pwr Ok LED Console Port Auxiliary Port	Status Output Interface
Power Plug	Power Interface

In addition to the built-in interfaces, the router also has additional port adapters that can optionally be placed in an available slot. These port adapters have many embodiments, including multiple Ethernet, token ring, and modem cards to handle frame relay, ATM, and ISDN connections.

Roles and Services

Authentication is role-based. There are two main roles in the router that operators may assume: the Crypto Officer role and the User role. The administrator of the router assumes the Crypto Officer role in order to configure and maintain the router using Crypto Officer services, while the Users exercise only the basic User services. Both roles are authenticated by providing a valid username and password. The configuration of the encryption and decryption functionality is performed only by the Crypto Officer after authentication to the Crypto Officer role by providing a valid Crypto Officer username and password. Once the Crypto Officer has configured the encryption and decryption functionality, the User can use this functionality after authentication to the User role by providing a valid User username and password. The Crypto Officer can also use the encryption and decryption functionality after authentication to the Crypto Officer role. The module supports RADIUS and TACACS+ for authentication and they are used in the FIPS mode. A complete description of all the management and configuration capabilities of the Cisco Routers can be found in the *Performing Basic System Management* manuals and in the online help for the routers.

The User and Crypto Officer passwords and the RADIUS/TACACS+ shared secrets must each be at least 8 alphanumeric characters in length. See the "Secure Operation of the Cisco 1721, 1760, 2621XM, 2651XM, 2691, 3725, 3745, and 7206 VXR NPE-400 Routers" section on page 42 for more information.

If only integers 0-9 are used without repetition for an 8 digit PIN, the probability of randomly guessing the correct sequence is 1 in 1,814,400. Including the rest of the alphanumeric characters drastically decreases the odds of guessing the correct sequence.

Crypto Officer Services

During initial configuration of the router, the Crypto Officer password (the "enable" password) is defined. A Crypto Officer may assign permission to access the Crypto Officer role to additional accounts, thereby creating additional Crypto Officers.

The Crypto Officer role is responsible for the configuration and maintenance of the router. The Crypto Officer services consist of the following:

- **Configure the router**—define network interfaces and settings, create command aliases, set the protocols the router will support, enable interfaces and network services, set system date and time, and load authentication information.
- **Define Rules and Filters**—create packet Filters that are applied to User data streams on each interface. Each Filter consists of a set of Rules, which define a set of packets to permit or deny based characteristics such as protocol ID, addresses, ports, TCP connection establishment, or packet direction.
- **Status Functions**—view the router configuration, routing tables, active sessions, use Gets to view SNMP MIB II statistics, health, temperature, memory status, voltage, packet statistics, review accounting logs, and view physical interface status.
- **Manage the router**—log off users, shutdown or reload the outer, manually back up router configurations, view complete configurations, manager user rights, and restore router configurations.
- **Set Encryption/Bypass**—set up the configuration tables for IP tunneling. Set keys and algorithms to be used for each IP range or allow plaintext packets to be set from specified IP address.
- **Change WAN Interface Cards/Network Modules**—insert and remove WICs or NMs as described in the second bullet in the "Initial Setup" section on page 43 of this document.

User Services

A User enters the system by accessing the console port with a terminal program. The IOS prompts the User for their password. If the password is correct, the User is allowed entry to the IOS executive program. The services available to the User role consist of the following:

- **Status Functions**—view state of interfaces, state of layer 2 protocols, version of IOS currently running
- **Network Functions**—connect to other network devices through outgoing telnet, PPP, etc. and initiate diagnostic network services (i.e., ping, mtrace)
- **Terminal Functions**—adjust the terminal session (e.g., lock the terminal, adjust flow control)
- **Directory Services**—display directory of files kept in flash memory

Physical Security

The router is entirely encased by a thick steel chassis. WIC slots, on-board LAN connectors, Console/Auxiliary connectors, power cable connections, and power switches are provided on the router. Specific portions of the chassis may be removed to allow access to the motherboard, memory, and expansion slots.

Any WIC or other module slot, which is not populated with a WIC or a module, must be populated with an appropriate slot cover in order to operate in a FIPS compliant mode. Slot covers are included with each router, and additional covers may be ordered from Cisco. The same procedure mentioned below to apply tamper evidence labels for WICs and other modules must also be followed to apply tamper evidence labels for the slot covers.

Once the router has been configured in to meet FIPS 140-2 Level 2 requirements, the router cannot be accessed without signs of tampering. To seal the system, apply serialized tamper-evidence labels as follows:

To apply serialized tamper-evidence labels to the Cisco 1721:

Step 1 Clean the cover of any grease, dirt, or oil before applying the tamper evidence labels. Alcohol-based cleaning pads are recommended for this purpose. The temperature of the router should be above 10°C.

Step 2 Place the first label on the router as shown in Figure 20. The tamper evidence label should be placed so that the one half of the tamper evidence label covers the top-half of the right side of the enclosure and the other half covers the bottom-half of the right side of the router. Any attempt to remove the enclosure will leave tamper evidence.

Step 3 Place the second label on the router as shown in Figure 20. The tamper evidence label should be placed so that the one half of the tamper evidence label covers the top-half of the left side of the enclosure and the other half covers the bottom-half of the left side of the router. Any attempt to remove the enclosure will leave tamper evidence.

Step 4 Place the third label on the router as shown in Figure 20. The tamper evidence label should be placed so that the half of the label covers the enclosure and the other half covers the left WAN interface card slot. Any attempt to remove a WAN interface card will leave tamper evidence.

Step 5 Place the fourth label on the router as shown in Figure 20. The tamper evidence label should be placed so that one half of the label covers the enclosure and the other half covers the right WAN interface card slot. Any attempt to remove a WAN interface card will leave tamper evidence.

Step 6 The labels completely cure within five minutes.

To apply serialized tamper-evidence labels to the Cisco 1760:

Step 1 Clean the cover of any grease, dirt, or oil before applying the tamper evidence labels. Alcohol-based cleaning pads are recommended for this purpose. The temperature of the router should be above 10°C.

Step 2 Place the first label on the router as shown in Figure 20. The tamper evidence label should be placed so that the one half of the tamper evidence label covers the right side of the enclosure and the other half covers the right side of the front of the router. Any attempt to remove the enclosure will leave tamper evidence.

Step 3 Place the second label on the router as shown in Figure 20. The tamper evidence label should be placed so that the one half of the tamper evidence label covers the left side of the enclosure and the other half covers the left side of the front of the router. Any attempt to remove the enclosure will leave tamper evidence.

Step 4 Place the third label on the router as shown in Figure 20. The tamper evidence label should be placed so that the half of the label covers the bottom of the enclosure and the other half covers the first WAN interface card slot. Any attempt to remove a WAN interface card will leave tamper evidence.

Step 5 Place the fourth label on the router as shown in Figure 20. The tamper evidence label should be placed so that the half of the label covers the bottom of the enclosure and the other half covers the second WAN interface card slot. Any attempt to remove a WAN interface card will leave tamper evidence.

Step 6 Place the fifth label on the router as shown in Figure 20. The tamper evidence label should be placed so that the half of the label covers the bottom of the enclosure and the other half covers the third WAN interface card slot. Any attempt to remove a WAN interface card will leave tamper evidence.

Step 7 Place the sixth label on the router as shown in Figure 20. The tamper evidence label should be placed so that the half of the label covers the bottom of the enclosure and the other half covers the fourth WAN interface card slot. Any attempt to remove a WAN interface card will leave tamper evidence.

Step 8 The labels completely cure within five minutes.

Figure 20 Cisco 1721 and Cisco 1760 Tamper Evidence Label Placement

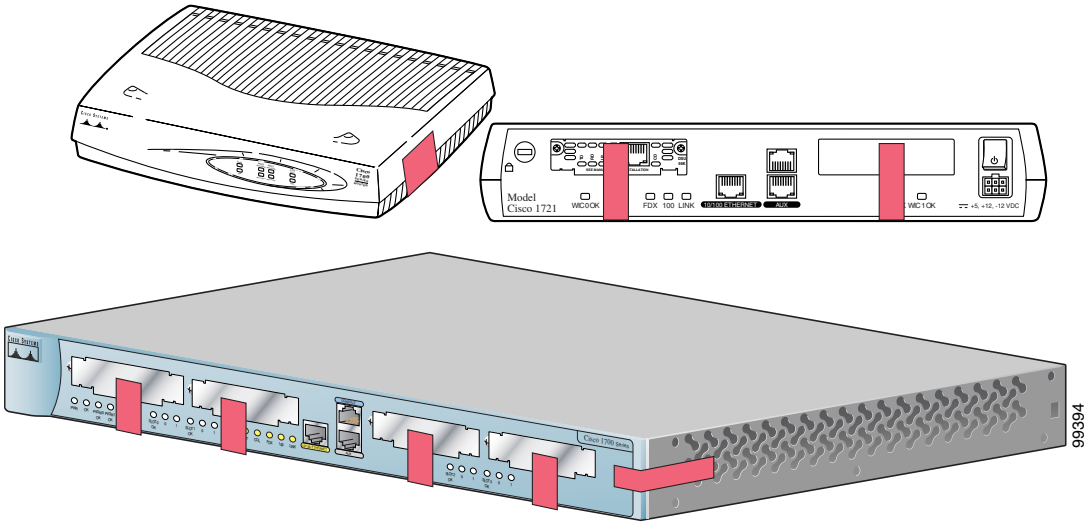

To apply serialized tamper-evidence labels to the Cisco 2621XM and Cisco 2651XM:

Step 1 Clean the cover of any grease, dirt, or oil before applying the tamper evidence labels. Alcohol-based cleaning pads are recommended for this purpose. The temperature of the router should be above 10°C.

Step 2 Place the first label on the router as shown in Figure 21. The tamper evidence label should be placed so that the one half of the tamper evidence label covers the enclosure and the other half covers the side of the router. Any attempt to remove the enclosure will leave tamper evidence.

Step 3 Place the second label on the router as shown in Figure 21. The tamper evidence label should be placed so that the one half of the tamper evidence label covers the enclosure and the other half covers the side of the router. Any attempt to remove the enclosure will leave tamper evidence.

Step 4 Place the third label on the router as shown in Figure 21. The tamper evidence label should be placed so that the one half of the label covers the enclosure and the other half covers the Network Module slot. Any attempt to remove a Network Module will leave tamper evidence.

Step 5 Place the fourth label on the router as shown in Figure 21. The tamper evidence label should be placed so that the half of the label covers the enclosure and the other half covers the WAN interface card slot. Any attempt to remove a WAN interface card will leave tamper evidence.

Step 6 Place the fifth label on the router as shown in Figure 21. The tamper evidence label should be placed so that one half of the label covers the enclosure and the other half covers the WAN interface card slot. Any attempt to remove a WAN interface card will leave tamper evidence.

Step 7 The labels completely cure within five minutes.

Figure 21 Cisco 2621XM and Cisco 2651XM Tamper Evidence Label Placement

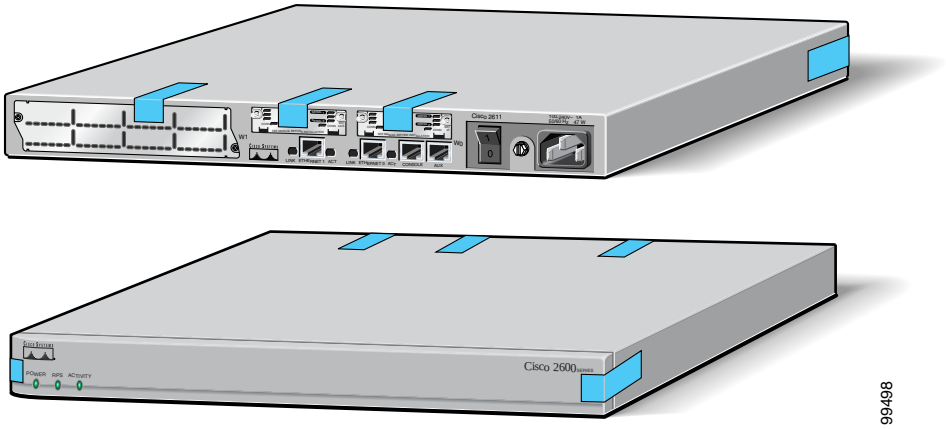

To apply serialized tamper-evidence labels to the Cisco 2691:

Step 1 Clean the cover of any grease, dirt, or oil before applying the tamper evidence labels. Alcohol-based cleaning pads are recommended for this purpose. The temperature of the router should be above 10°C.

Step 2 Place the first label on the router as shown in Figure 22. The tamper evidence label should be placed so that the one half of the tamper evidence label covers the enclosure and the other half covers the right side of the router. Any attempt to remove the enclosure will leave tamper evidence.

Step 3 Place the second label on the router as shown in Figure 22. The tamper evidence label should be placed so that the one half of the tamper evidence label covers the enclosure and the other half covers the left side of the router. Any attempt to remove the enclosure will leave tamper evidence.

Step 4 Place the third label on the router as shown in Figure 22. The tamper evidence label should be placed so that the one half of the label covers the enclosure and the other half covers the Network Module slot. Any attempt to remove a Network Module will leave tamper evidence.

Step 5 Place the fourth label on the router as shown in Figure 22. The tamper evidence label should be placed so that the half of the label covers the enclosure and the other half covers the left WAN interface card slot. Any attempt to remove a WAN interface card will leave tamper evidence.

Step 6 Place the fifth label on the router as shown in Figure 22. The tamper evidence label should be placed so that one half of the label covers the enclosure and the other half covers the middle WAN interface card slot. Any attempt to remove a WAN interface card will leave tamper evidence.

Step 7 Place the sixth label on the router as shown in Figure 22. The tamper evidence label should be placed so that one half of the label covers the enclosure and the other half covers the right WAN interface card slot. Any attempt to remove a WAN interface card will leave tamper evidence.

Step 8 Place the seventh label on the router as shown in Figure 22. The tamper evidence label should be placed so that one half of the label covers the enclosure and the other half covers the Compact Flash slot. Any attempt to remove a CF card will leave tamper evidence.

Step 9 The labels completely cure within five minutes.

Figure 22 Tamper Evidence Label Placement

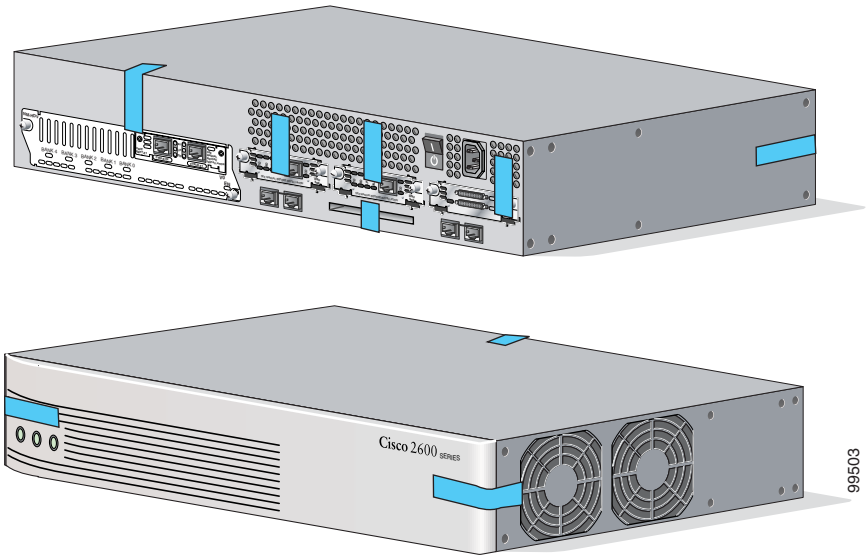

To apply tamper-evidence labels to the Cisco 3725:

Step 1 Clean the cover of any grease, dirt, or oil before applying the tamper evidence labels. Alcohol-based cleaning pads are recommended for this purpose. The temperature of the router should be above 10°C.

Step 2 Place the first label on the router as shown in Figure 23. The tamper evidence label should be placed so that the one half of the tamper evidence label covers the enclosure and the other half covers the right side of the router. Any attempt to remove the enclosure will leave tamper evidence.

Step 3 Place the second label on the router as shown in Figure 23. The tamper evidence label should be placed so that the one half of the tamper evidence label covers the enclosure and the other half covers the left side of the router. Any attempt to remove the enclosure will leave tamper evidence.

Step 4 Place the third label on the router as shown in Figure 23. The tamper evidence label should be placed so that the one half of the label covers the enclosure and the other half covers the top double-sized Network Module slot. Any attempt to remove a network module will leave tamper evidence.

Step 5 Place the fourth label on the router as shown in Figure 23. The tamper evidence label should be placed so that the half of the label covers the enclosure and the other half covers the bottom Network Module slot. Any attempt to remove a network module will leave tamper evidence.

Step 6 Place the fifth label on the router as shown in Figure 23. The tamper evidence label should be placed so that one half of the label covers the enclosure and the other half covers the left WAN interface card slot. Any attempt to remove a WAN interface card will leave tamper evidence.

Step 7 Place the sixth label on the router as shown in Figure 23. The tamper evidence label should be placed so that one half of the label covers the enclosure and the other half covers the middle WAN interface card slot. Any attempt to remove a WAN interface card will leave tamper evidence.

Step 8 Place the seventh label on the router as shown in Figure 23. The tamper evidence label should be placed so that one half of the label covers the enclosure and the other half covers the right WAN interface card slot. Any attempt to remove a WAN interface card will leave tamper evidence.

Step 9 Place the eighth label on the router as shown in Figure 23. The tamper evidence label should be placed so that one half of the label covers the enclosure and the other half covers the Compact Flash slot. Any attempt to remove a CF card will leave tamper evidence.

Step 10 The labels completely cure within five minutes.

To apply tamper-evidence labels to the Cisco 3745:

Step 1 Clean the cover of any grease, dirt, or oil before applying the tamper evidence labels. Alcohol-based cleaning pads are recommended for this purpose. The temperature of the router should be above 10°C.

Step 2 Place the first label on the router as shown in Figure 23. The tamper evidence label should be placed so that the one half of the tamper evidence label covers the enclosure and the other half covers the right side of the router. Any attempt to remove the enclosure will leave tamper evidence.

Step 3 Place the second label on the router as shown in Figure 23. The tamper evidence label should be placed so that the one half of the tamper evidence label covers the enclosure and the other half covers the left side of the router. Any attempt to remove the enclosure will leave tamper evidence.

Step 4 Place the third label on the router as shown in Figure 23. The tamper evidence label should be placed so that the one half of the label covers the enclosure and the other half covers the top-left Network Module slot. Any attempt to remove a network module will leave tamper evidence.

Step 5 Place the fourth label on the router as shown in Figure 23. The tamper evidence label should be placed so that the half of the label covers the enclosure and the other half covers the bottom-left Network Module slot. Any attempt to remove a network module will leave tamper evidence.

Step 6 Place the fifth label on the router as shown in Figure 23. The tamper evidence label should be placed so that the one half of the label covers the enclosure and the other half covers the top-right Network Module slot. Any attempt to remove a network module will leave tamper evidence.

Step 7 Place the sixth label on the router as shown in Figure 23. The tamper evidence label should be placed so that the half of the label covers the enclosure and the other half covers the bottom-right Network Module slot. Any attempt to remove a network module will leave tamper evidence.

Step 8 Place the seventh label on the router as shown in Figure 23. The tamper evidence label should be placed so that one half of the label covers the enclosure and the other half covers the left WAN interface card slot. Any attempt to remove a WAN interface card will leave tamper evidence.

Step 9 Place the eighth label on the router as shown in Figure 23. The tamper evidence label should be placed so that one half of the label covers the enclosure and the other half covers the middle WAN interface card slot. Any attempt to remove a WAN interface card will leave tamper evidence.

Step 10 Place the ninth label on the router as shown in Figure 23. The tamper evidence label should be placed so that one half of the label covers the enclosure and the other half covers the right WAN interface card slot. Any attempt to remove a WAN interface card will leave tamper evidence.

Step 11 Place the tenth label on the router as shown in Figure 23. The tamper evidence label should be placed so that one half of the label covers the enclosure and the other half covers the Compact Flash slot. Any attempt to remove a CF card will leave tamper evidence.

Step 12 The labels completely cure within five minutes.

Figure 23 Cisco 3725 and Cisco 3745 Tamper Evidence Label Placement

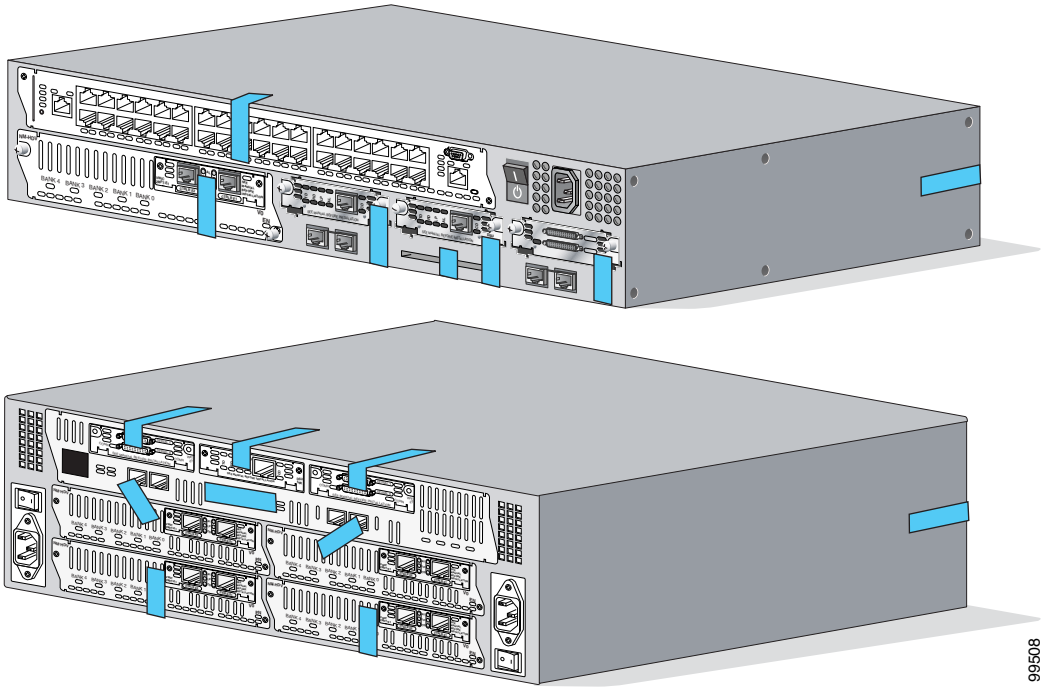

To apply tamper-evidence labels to the Cisco 7206 VXR NPE-400:

Step 1 Clean the cover of any grease, dirt, or oil before applying the tamper evidence labels. Alcohol-based cleaning pads are recommended for this purpose. The temperature of the router should be above 10°C.

Step 2 Place the first label on the router as shown in Figure 24. The tamper evidence label should be placed so that the one half of the label covers the enclosure and the other half covers the 7206 VXR NPE-400 Input/Output Controller.

Step 3 Place the second label on the router as shown in Figure 24. The tamper evidence label should be placed over the Flash PC Card slots on the Input/Output Controller.

Step 4 Place the third label on the router as shown in Figure 24. The tamper evidence label should be placed so that one half of the label covers the enclosure and the other half covers the port adapter slot 1.

Step 5 Place the fourth label on the router as shown in Figure 24. The tamper evidence label should be placed so that one half of the label covers the enclosure and the other half covers the port adapter slot 2.

Step 6 Place the fifth label on the router as shown in Figure 24. The tamper evidence label should be placed so that one half of the label covers the enclosure and the other half covers the port adapter slot 3.

Step 7 Place the sixth label on the router as shown in Figure 24. The tamper evidence label should be placed so that one half of the label covers the enclosure and the other half covers the port adapter slot 4.

Step 8 Place the seventh label on the router as shown in Figure 24. The tamper evidence label should be placed so that one half of the label covers the enclosure and the other half covers the port adapter slot 5.

Step 9 Place the eighth label on the router as shown in Figure 24. The tamper evidence label should be placed so that one half of the label covers the enclosure and the other half covers the port adapter slot 6.

Step 10 Place the ninth label on the router as shown in Figure 24. The tamper evidence label should be placed so that one half of the label covers the enclosure and the other half covers the network processing engine.

Step 11 Place the tenth label on the router as shown in Figure 24. The tamper evidence label should be placed so that one half of the label covers the enclosure and the other half covers the power supply plate.

Step 12 Place the eleventh label on the router as shown in Figure 24. The tamper evidence label should be placed so that one half of the label covers the enclosure and the other half covers the redundant power supply plate.

Step 13 The labels completely cure within five minutes.

Figure 24 Cisco 7206 VXR NPE-400 Tamper Evidence Label Placement

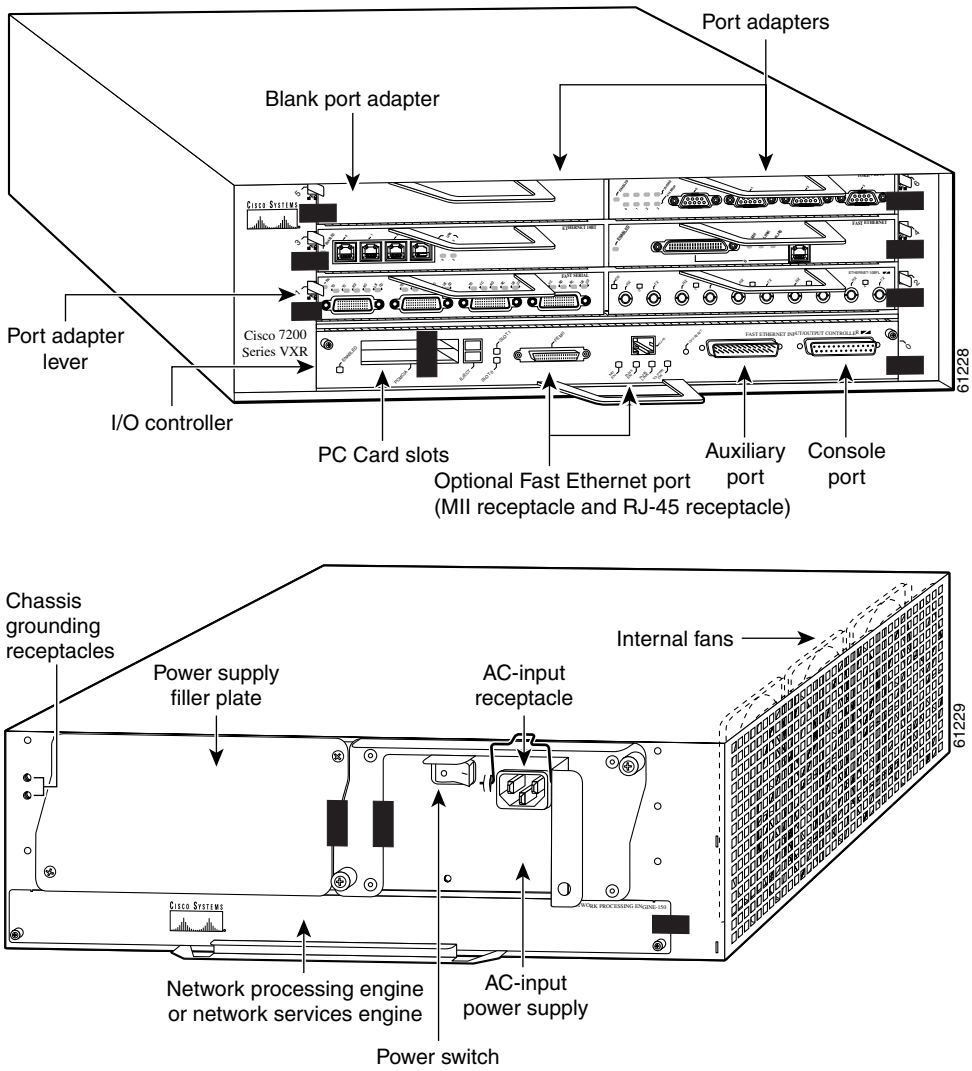

The tamper evidence seals are produced from a special thin gauge vinyl with self-adhesive backing. Any attempt to open the router or remove components will damage the tamper evidence seals or the painted surface and metal of the module cover. Since the tamper evidence seals have non-repeated serial numbers, they may be inspected for damage and compared against the applied serial numbers to verify that the module has not been tampered. Tamper evidence seals can also be inspected for signs of tampering, which include the following: curled corners, bubbling, crinkling, rips, tears, and slices. The word "OPEN" may appear if the label was peeled back.

Cryptographic Key Management

The router securely administers both cryptographic keys and other critical security parameters such as passwords. The tamper evidence seals provide physical protection for all keys. All keys are also protected by the password-protection on the Crypto Officer role login, and can be zeroized by the Crypto Officer. Keys are exchanged manually and entered electronically via manual key exchange or Internet Key Exchange (IKE).

The module supports the following critical security parameters (CSPs):

Table 18 Critical Security Parameters

#	CSP Name	Description	Storage
1	CSP 1	This is the seed key for X9.31 PRNG. This key is stored in DRAM and updated periodically after the generation of 400 bites; hence, it is zeroized periodically. Also, the operator can turn off the router to zeroize this key.	DRAM (plaintext)
2	CSP 2	The private exponent used in Diffie-Hellman (DH) exchange. Zeroized after DH shared secret has been generated.	DRAM (plaintext)
3	CSP 3	The shared secret within IKE exchange. Zeroized when IKE session is terminated.	DRAM (plaintext)
4	CSP 4	Same as above	DRAM (plaintext)
5	CSP 5	Same as above	DRAM (plaintext)
6	CSP 6	Same as above	DRAM (plaintext)
7	CSP 7	The IKE session encrypt key. The zeroization is the same as above.	DRAM (plaintext)
8	CSP 8	The IKE session authentication key. The zeroization is the same as above.	DRAM (plaintext)
9	CSP 9	The RSA private key. “crypto key zeroize” command zeroizes this key.	NVRAM (plaintext)
10	CSP 10	The key used to generate IKE skeyid during preshared-key authentication. “no crypto isakmp key” command zeroizes it. This key can have two forms based on whether the key is related to the hostname or the IP address.	NVRAM (plaintext)
11	CSP 11	This key generates keys 3, 4, 5 and 6. This key is zeroized after generating those keys.	DRAM (plaintext)

Table 18 Critical Security Parameters (Continued)

12	CSP 12	The RSA public key used to validate signatures within IKE. These keys are expired either when CRL (certificate revocation list) expires or 5 secs after if no CRL exists. After above expiration happens and before a new public key structure is created this key is deleted. This key does not need to be zeroized because it is a public key; however, it is zeroized as mentioned here.	DRAM (plaintext)
13	CSP 13	The fixed key used in Cisco vendor ID generation. This key is embedded in the module binary image and can be deleted by erasing the Flash.	NVRAM (plaintext)
14	CSP 14	The IPSec encryption key. Zeroized when IPSec session is terminated.	DRAM (plaintext)
15	CSP 15	The IPSec authentication key. The zeroization is the same as above.	DRAM (plaintext)
16	CSP 16	The RSA public key of the CA. “no crypto ca trust <label>” command invalidates the key and it frees the public key label which in essence prevent use of the key. This key does not need to be zeroized because it is a public key.	NVRAM (plaintext)
17	CSP 17	This key is a public key of the DNS server. Zeroized using the same mechanism as above. “no crypto ca trust <label>” command invalidate the DNS server’s public key and it frees the public key label which in essence prevent use of that key. This label is different from the label in the above key. This key does not need to be zeroized because it is a public key.	NVRAM (plaintext)
18	CSP 18	The SSL session key. Zeroized when the SSL connection is terminated.	DRAM (plaintext)
19	CSP 19	The ARAP key that is hardcoded in the module binary image. This key can be deleted by erasing the Flash.	Flash (plaintext)
20	CSP 20	This is an ARAP user password used as an authentication key. A function uses this key in a DES algorithm for authentication.	DRAM (plaintext)
21	CSP 21	The key used to encrypt values of the configuration file. This key is zeroized when the “no key config-key” is issued.	NVRAM (plaintext)
22	CSP 22	This key is used by the router to authenticate itself to the peer. The router itself gets the password (that is used as this key) from the AAA server and sends it onto the peer. The password retrieved from the AAA server is zeroized upon completion of the authentication attempt.	DRAM (plaintext)
23	CSP 23	The RSA public key used in SSH. Zeroized after the termination of the SSH session. This key does not need to be zeroized because it is a public key; However, it is zeroized as mentioned here.	DRAM (plaintext)
24	CSP 24	The authentication key used in PPP. This key is in the DRAM and not zeroized at runtime. One can turn off the router to zeroize this key because it is stored in DRAM.	DRAM (plaintext)

Table 18 Critical Security Parameters (Continued)

25	CSP 25	This key is used by the router to authenticate itself to the peer. The key is identical to #22 except that it is retrieved from the local database (on the router itself). Issuing the "no username password" zeroizes the password (that is used as this key) from the local database.	NVRAM (plaintext)
26	CSP 26	This is the SSH session key. It is zeroized when the SSH session is terminated.	DRAM (plaintext)
27	CSP 27	The password of the User role. This password is zeroized by overwriting it with a new password.	NVRAM (plaintext)
28	CSP 28	The plaintext password of the CO role. This password is zeroized by overwriting it with a new password.	NVRAM (plaintext)
29	CSP 29	The ciphertext password of the CO role. However, the algorithm used to encrypt this password is not FIPS approved. Therefore, this password is considered plaintext for FIPS purposes. This password is zeroized by overwriting it with a new password.	NVRAM (plaintext)
30	CSP 30	The RADIUS shared secret. This shared secret is zeroized by executing the "no" form of the RADIUS shared secret set command.	NVRAM (plaintext), DRAM (plaintext)
31	CSP 31	The TACACS+ shared secret. This shared secret is zeroized by executing the "no" form of the TACACS+ shared secret set command.	NVRAM (plaintext), DRAM (plaintext)

The services accessing the CSPs, the type of access and which role accesses the CSPs are listed in Table 19.

Table 19 Role and Service Access to CSPs

SRDI/Role/Service Access Policy	Role/Service	User Role	Status Functions	Network Functions	Terminal Functions	Directory Services	Crypto-Officer Role	Configure the Router	Define Rules and Filters	Status Functions	Manage the Router	Set Encryptions/Bypass	Change WAN Interface Cards
Security Relevant Data Item													
CSP 1				r							d	r w d	
CSP 2				r								r w d	

Table 19 Role and Service Access to CSPs (Continued)

SRDI/Role/Service Access Policy	Role/Service	User Role	Status Functions	Network Functions	Terminal Functions	Directory Services	Crypto-Officer Role	Configure the Router	Define Rules and Filters	Status Functions	Manage the Router	Set Encryptions/Bypass	Change WAN Interface Cards
CSP 3				r								r w d	
CSP 4				r								r w d	
CSP 5				r								r w d	
CSP 6				r								r w d	
CSP 7				r								r w d	
CSP 8				r								r w d	
CSP 9				r								r w d	
CSP 10				r								r w d	
CSP 11				r								r w d	
CSP 12				r								r w d	
CSP 13				r				r w d					
CSP 14				r								r w d	

Table 19 Role and Service Access to CSPs (Continued)

SRDI/Role/Service Access Policy	Role/Service	User Role	Status Functions	Network Functions	Terminal Functions	Directory Services	Crypto-Officer Role	Configure the Router	Define Rules and Filters	Status Functions	Manage the Router	Set Encryptions/Bypass	Change WAN Interface Cards
CSP 15				r								r w d	
CSP 16				r								r w	
CSP 17				r								r w d	
CSP 18				r								r w d	
CSP 19				r				r w d					
CSP 20				r							r w d		
CSP 21								r w d			r w d		
CSP 22				r							r w d		
CSP 23				r								r w d	
CSP 24				r							d	r w	
CSP 25				r				r w d					
CSP 26				r								r w d	

Table 19 Role and Service Access to CSPs (Continued)

SRDI/Role/Service Access Policy	Role/Service	User Role	Status Functions	Network Functions	Terminal Functions	Directory Services	Crypto-Officer Role	Configure the Router	Define Rules and Filters	Status Functions	Manage the Router	Set Encryptions/Bypass	Change WAN Interface Cards
CSP 27				r							r w d		
CSP 28											r w d		
CSP 29											r w d		
CSP 30											r w d		
CSP 31											r w d		

The module supports DES (only for legacy systems), 3DES, DES-MAC, TDES-MAC, AES, SHA-1, HMAC-SHA-1, MD5, MD4, HMAC MD5, Diffie-Hellman, RSA (for digital signatures and encryption/decryption (for IKE authentication)), cryptographic algorithms. The MD5, HMAC MD5, and MD4 algorithms are disabled when operating in FIPS mode.

The module supports three types of key management schemes:

- Manual key exchange method that is symmetric. DES/3DES/AES key and HMAC-SHA-1 key are exchanged manually and entered electronically.
- Internet Key Exchange method with support for exchanging pre-shared keys manually and entering electronically.
  - The pre-shared keys are used with Diffie-Hellman key agreement technique to derive DES, 3DES or AES keys.
  - The pre-shared key is also used to derive HMAC-SHA-1 key.
- Internet Key Exchange with RSA-signature authentication.

All pre-shared keys are associated with the CO role that created the keys, and the CO role is protected by a password. Therefore, the CO password is associated with all the pre-shared keys. The Crypto Officer needs to be authenticated to store keys. All Diffie-Hellman (DH) keys agreed upon for individual tunnels are directly associated with that specific tunnel only via the IKE protocol.

Key Zeroization

All the keys and CSPs of the module can be zeroized. Please refer to the Description column of Table 18 for information on methods to zeroize each key and CSP.

Self-Tests

In order to prevent any secure data from being released, it is important to test the cryptographic components of a security module to insure all components are functioning correctly. The router includes an array of self-tests that are run during startup and periodically during operations. If any of the self-tests fail, the router transitions into an error state. Within the error state, all secure data transmission is halted and the router outputs status information indicating the failure.

Self-tests performed by the IOS image:

- Power-up tests:
  - Firmware integrity test
  - RSA signature KAT (both signature and verification)
  - DES KAT
  - TDES KAT
  - AES KAT
  - SHA-1 KAT
  - PRNG KAT
  - Power-up bypass test
  - Diffie-Hellman self-test
  - HMAC-SHA-1 KAT
- Conditional tests:
  - Conditional bypass test
  - Pairwise consistency test on RSA signature
  - Continuous random number generator tests

Secure Operation of the Cisco 1721, 1760, 2621XM, 2651XM, 2691, 3725, 3745, and 7206 VXR NPE-400 Routers

The Cisco 1721, 1760, 2621XM, 2651XM, 2691, 3725, 3745, and 7206 VXR NPE-400 Modular Access Routers meet all the Level 2 requirements for FIPS 140-2. Follow the setting instructions provided below to place the module in FIPS mode. Operating these routers without maintaining the following settings will remove the module from the FIPS approved mode of operation.

Initial Setup

- The Crypto Officer must apply tamper evidence labels as described in the "Physical Security" section of this document.
- Only a Crypto Officer may add and remove WAN Interface Cards. When removing the tamper evidence label, the Crypto Officer should remove the entire label from the router and clean the cover of any grease, dirt, or oil with an alcohol-based cleaning pad. The Crypto Officer must re-apply tamper evidence labels on the router as described in the "Physical Security" section of this document.
- The Crypto Officer must apply the opacity shield as described in the "The Cisco 1721/1760 Cryptographic Module" of this document.

System Initialization and Configuration

- The Crypto Officer must perform the initial configuration. Cisco IOS version 12.3(3d) is the only allowable image; no other image may be loaded.
- The value of the boot field must be 0x0101 (the factory default). This setting disables break from the console to the ROM monitor and automatically boots the Cisco IOS image. From the "configure terminal" command line, the Crypto Officer enters the following syntax:

  ```
  config-register 0x0101
  ```

- The Crypto Officer must create the "enable" password for the Crypto Officer role. The password must be at least 8 characters and is entered when the Crypto Officer first engages the "enable" command. The Crypto Officer enters the following syntax at the "#" prompt:

  ```
  enable secret <PASSWORD>
  ```

- The Crypto Officer must always assign passwords (of at least 8 characters) to users. Identification and authentication on the console port is required for Users. From the "configure terminal" command line, the Crypto Officer enters the following syntax:

  ```
  line con 0
  password <PASSWORD>
  login local
  ```

- The Crypto Officer shall only assign users to a privilege level 1 (the default).
- The Crypto Officer shall not assign a command to any privilege level other than its default.
- The Crypto Officer may configure the module to use RADIUS or TACACS+ for authentication. Configuring the module to use RADIUS or TACACS+ for authentication is optional. If the module is configured to use RADIUS or TACACS+, the Crypto-Officer must define RADIUS or TACACS+ shared secret keys that are at least 8 characters long.
- If the Crypto Officer loads any IOS image onto the router, this will put the router into a non-FIPS mode of operation.

IPSec Requirements and Cryptographic Algorithms

- There are two types of key management method that are allowed in FIPS mode: Internet Key Exchange (IKE) and IPSec manually entered keys.
- Although the Cisco IOS implementation of IKE allows a number of algorithms, only the following algorithms are allowed in a FIPS 140-2 configuration:
  - ah-sha-hmac
  - esp-des
  - esp-sha-hmac
  - esp-3des
  - esp-aes
- The following algorithms are not FIPS approved and should be disabled:
  - MD-4 and MD-5 for signing
  - MD-5 HMAC

Protocols

All SNMP operations must be performed within a secure IPSec tunnel.

Remote Access

- Telnet access to the module is only allowed via a secure IPSec tunnel between the remote system and the module. The Crypto officer must configure the module so that any remote connections via telnet are secured through IPSec.
- SSH access to the module is only allowed if SSH is configured to use a FIPS-approved algorithm. The Crypto officer must configure the module so that SSH uses only FIPS-approved algorithms.

Related Documentation

For more information about the Cisco 1721, 1760, 2621XM, 2651XM, 2691, 3725, 3745, and 7206 VXR modular access routers, refer to the following documents:

- *Cisco 1721 Access Router Hardware Installation Guide*
- *Cisco 1760 Modular Access Router Hardware Installation Guide*
- *Cisco 1700 Series Router Software Configuration Guide*
- *Cisco 2600 Series Modular Routers Quick Start Guide*
- *Cisco 2600 Series Hardware Installation Guide*
- *Software Configuration Guide for Cisco 2600 Series, Cisco 3600 Series, and Cisco 3700 Series Routers*
- *Cisco 3725 Router Quick Start Guide*
- *Cisco 3745 Router Quick Start Guide*

- *Cisco 3700 Series Hardware Installation Guide*
- *Cisco 7200 VXR Installation and Configuration Guide*
- *Cisco 7200 VXR Quick Start Guide*
- *Cisco 7200 Series Routers Documentation Master Index*

Obtaining Documentation

Cisco documentation and additional literature are available on Cisco.com. Cisco also provides several ways to obtain technical assistance and other technical resources. These sections explain how to obtain technical information from Cisco Systems.

Cisco.com

You can access the most current Cisco documentation on the World Wide Web at this URL:

http://www.cisco.com/univercd/home/home.htm

You can access the Cisco website at this URL:

http://www.cisco.com

International Cisco websites can be accessed from this URL:

http://www.cisco.com/public/countries_languages.shtml

Ordering Documentation

You can find instructions for ordering documentation at this URL:

http://www.cisco.com/univercd/cc/td/doc/es_inpck/pdi.htm

You can order Cisco documentation in these ways:

- Registered Cisco.com users (Cisco direct customers) can order Cisco product documentation from the Ordering tool:

  http://www.cisco.com/en/US/partner/ordering/index.shtml
- Nonregistered Cisco.com users can order documentation through a local account representative by calling Cisco Systems Corporate Headquarters (California, USA) at 408 526-7208 or, elsewhere in North America, by calling 800 553-NETS (6387).

Documentation Feedback

You can submit e-mail comments about technical documentation to bug-doc@cisco.com.

You can submit comments by using the response card (if present) behind the front cover of your document or by writing to the following address:

Cisco Systems
Attn: Customer Document Ordering
170 West Tasman Drive
San Jose, CA 95134-9883

We appreciate your comments.

Obtaining Technical Assistance

For all customers, partners, resellers, and distributors who hold valid Cisco service contracts, the Cisco Technical Assistance Center (TAC) provides 24-hour-a-day, award-winning technical support services, online and over the phone. Cisco.com features the Cisco TAC website as an online starting point for technical assistance. If you do not hold a valid Cisco service contract, please contact your reseller.

Cisco TAC Website

The Cisco TAC website provides online documents and tools for troubleshooting and resolving technical issues with Cisco products and technologies. The Cisco TAC website is available 24 hours a day, 365 days a year. The Cisco TAC website is located at this URL:

http://www.cisco.com/tac

Accessing all the tools on the Cisco TAC website requires a Cisco.com user ID and password. If you have a valid service contract but do not have a login ID or password, register at this URL:

http://tools.cisco.com/RPF/register/register.do

Opening a TAC Case

Using the online TAC Case Open Tool is the fastest way to open P3 and P4 cases. (P3 and P4 cases are those in which your network is minimally impaired or for which you require product information.) After you describe your situation, the TAC Case Open Tool automatically recommends resources for an immediate solution. If your issue is not resolved using the recommended resources, your case will be assigned to a Cisco TAC engineer. The online TAC Case Open Tool is located at this URL:

http://www.cisco.com/tac/caseopen

For P1 or P2 cases (P1 and P2 cases are those in which your production network is down or severely degraded) or if you do not have Internet access, contact Cisco TAC by telephone. Cisco TAC engineers are assigned immediately to P1 and P2 cases to help keep your business operations running smoothly.

To open a case by telephone, use one of the following numbers:

Asia-Pacific: +61 2 8446 7411 (Australia: 1 800 805 227)
EMEA: +32 2 704 55 55
USA: 1 800 553-2447

For a complete listing of Cisco TAC contacts, go to this URL:

http://www.cisco.com/warp/public/687/Directory/DirTAC.shtml

TAC Case Priority Definitions

To ensure that all cases are reported in a standard format, Cisco has established case priority definitions.

Priority 1 (P1)—Your network is "down" or there is a critical impact to your business operations. You and Cisco will commit all necessary resources around the clock to resolve the situation.

Priority 2 (P2)—Operation of an existing network is severely degraded, or significant aspects of your business operation are negatively affected by inadequate performance of Cisco products. You and Cisco will commit full-time resources during normal business hours to resolve the situation.

Priority 3 (P3)—Operational performance of your network is impaired, but most business operations remain functional. You and Cisco will commit resources during normal business hours to restore service to satisfactory levels.

Priority 4 (P4)—You require information or assistance with Cisco product capabilities, installation, or configuration. There is little or no effect on your business operations.

Obtaining Additional Publications and Information

Information about Cisco products, technologies, and network solutions is available from various online and printed sources.

- Cisco Marketplace provides a variety of Cisco books, reference guides, and logo merchandise. Go to this URL to visit the company store:

  http://www.cisco.com/go/marketplace/

- The Cisco *Product Catalog* describes the networking products offered by Cisco Systems, as well as ordering and customer support services. Access the Cisco Product Catalog at this URL:

  http://cisco.com/univercd/cc/td/doc/pcat/

- *Cisco Press* publishes a wide range of general networking, training and certification titles. Both new and experienced users will benefit from these publications. For current Cisco Press titles and other information, go to Cisco Press online at this URL:

  http://www.ciscopress.com

- *Packet* magazine is the Cisco quarterly publication that provides the latest networking trends, technology breakthroughs, and Cisco products and solutions to help industry professionals get the most from their networking investment. Included are networking deployment and troubleshooting tips, configuration examples, customer case studies, tutorials and training, certification information, and links to numerous in-depth online resources. You can access Packet magazine at this URL:

  http://www.cisco.com/packet

- *iQ Magazine* is the Cisco bimonthly publication that delivers the latest information about Internet business strategies for executives. You can access iQ Magazine at this URL:

  http://www.cisco.com/go/iqmagazine

- *Internet Protocol Journal* is a quarterly journal published by Cisco Systems for engineering professionals involved in designing, developing, and operating public and private internets and intranets. You can access the Internet Protocol Journal at this URL:

  http://www.cisco.com/ipj

- Training—Cisco offers world-class networking training. Current offerings in network training are listed at this URL:

  http://www.cisco.com/en/US/learning/index.html